ZONE MONITOR - CLASS A VL-ZMA

Description

The VL-ZMA is a three zone monitor module that is designed to be DIN mounted inside of a Velocity control panel. It's powered and interfaced to the Velocity MMP via a RJ45 connection. The module has three class A zone monitors which can be typically used for conventional devices and/or for special detectors that are not available in addressable form such as UV detectors, aspiration and beam detectors etc. The module monitors and transmits the status (normal, open, short, or alarm) of zones with the detectors to a control panel. Each zone input can be programmed to either give a supervisory or alarm signal when active.

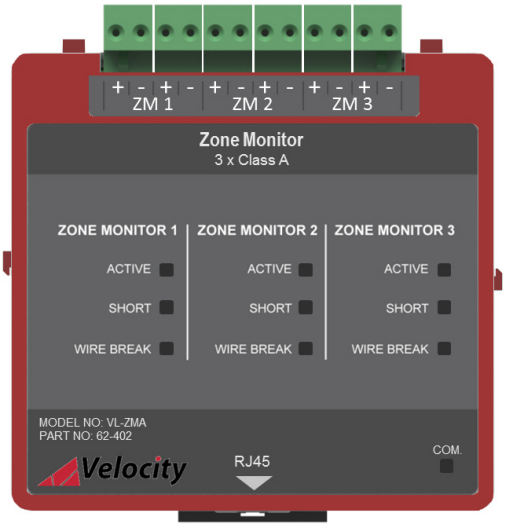

Features

- Designed to meet UL864 10th Edition requirements.
- 3 x Class A initiating device circuits.
- Each zone is monitored for open & short circuit.
- Extensive front unit status indications (see table below).
- Quick and easy to install by plugging the RJ45 cable into the module and control panel (cable supplied with unit).
- Each zone input can be configured as either Alarm or Supervisory.

Dimensions

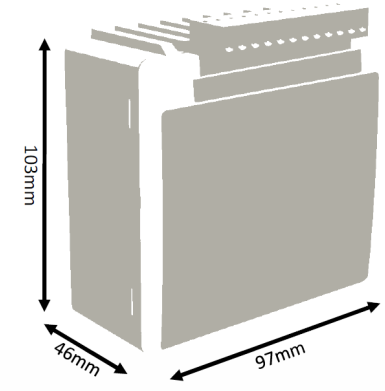

Front Unit Indications

LED Indication	Description
Active (Red)	On steady when an alarm/supervisory on the zone is active.
Short (Yellow)*	Flashing when a short circuit condition has been detected.
Wire Break (Yellow)*	Flashing when an open circuit condition has been detected.
Com. (Green)	Pulses to show communication between the module and the motherboard.

** When a VL-ZMA circuit is disabled, the Short & Wire Break LED's will be on steady (Yellow)*

NOT TO BE USED FOR INSTALLATION PURPOSES.
Velocity reserves the right to make changes at any time without notice in prices, colours, materials, components, equipment, specifications and models and also to discontinue models.

Specification

Specification	VL-ZMA
Part Number	62-402
Design Standard	UL864 10th Edition
Approval	UL Laboratories
Wiring Class	3 x Class A [Power Limited & Supervised]
Circuit Voltage	29VDC Nominal (19.5 - 30V)
Zone Max Current (under S/C conditions)	56mA
Zone Max Line Impedance	20Ω total (10Ω per core)
End of Line Resistor	N/A
Triggering Resistor	1KΩ
Operating Temperature	0˚C (32˚F) to 49˚C (120˚F)
Max Humidity	93% Non-Condensing
Size (mm) (HxWxD)	103mm x 97mm x 46mm
Weight	0.2KG
Recommended Cable Sizes	22 AWG to 14 AWG (0.3mm² to 2.5mm²)
Compatible Devices	VL-RS-01 (UL38 Listed)
Maximum Detectors Per Zone	20

Interior Panel View

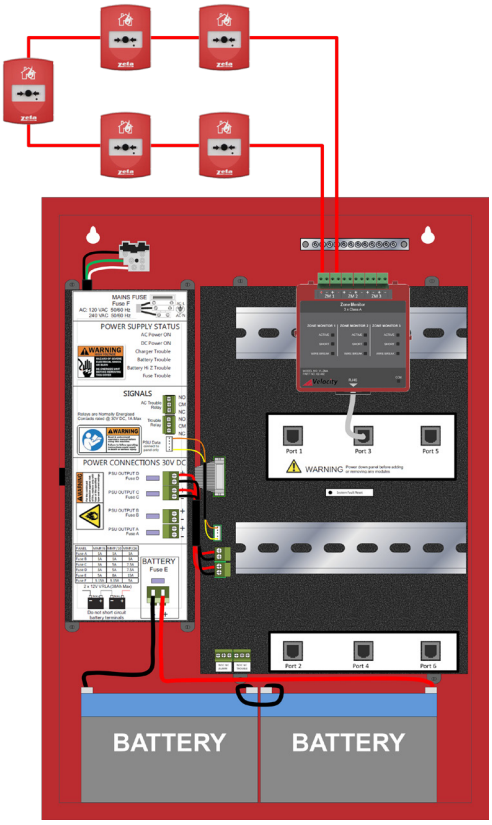

Typical Wiring Diagram (Class A)

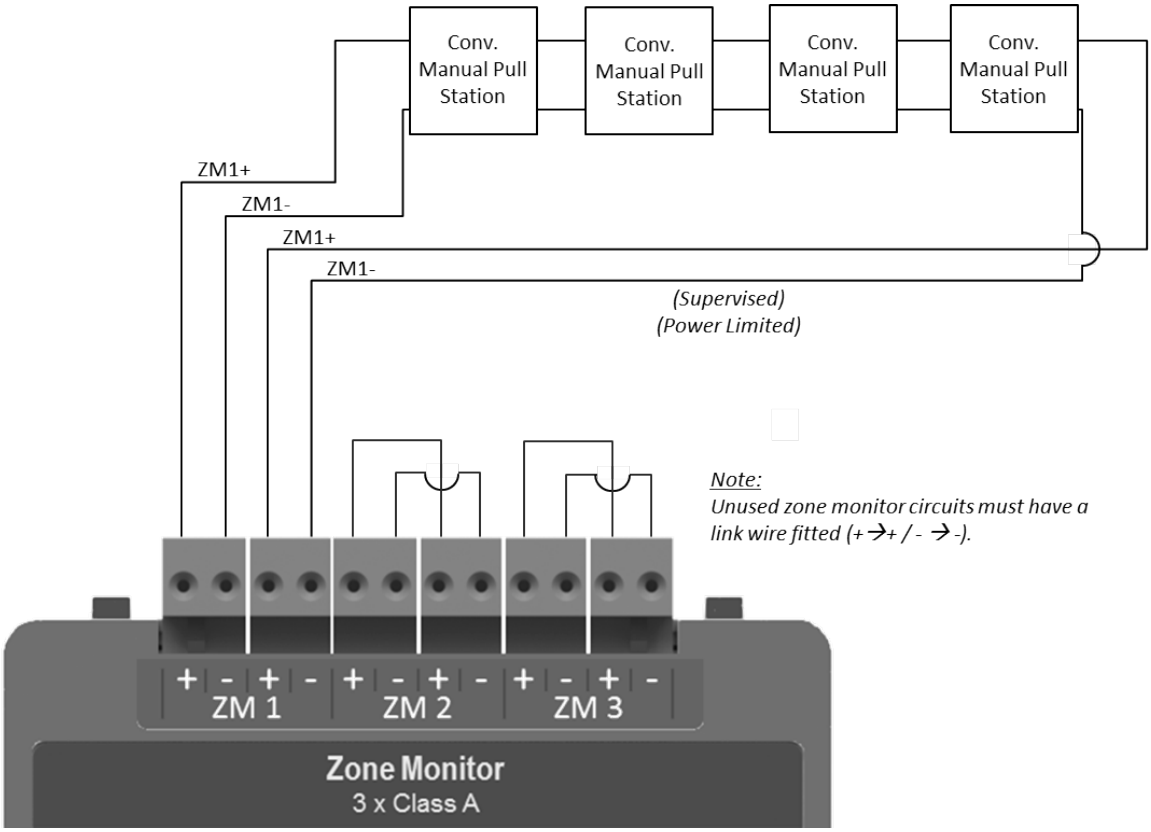

All specifications are subject to change without any notice.
For more information, contact with VELOCITY.

Velocity DETECTION OVER TIME
Zeta Alarms Limited
72-78 Morfa Road, Swansea
SA1 2EN
Tel: +44 1792 455 175 FAX: +44 1792 455 176

Distributed By