VDOT-U5015

EXPLOSION PROOF SMOKE DETECTOR

Description

The Det-Tronics® SmokeWatch™ VDOT-U5015 Explosion Proof Smoke Detector has Division and Zone explosion-proof ratings and is suitable for industrial and commercial applications. The SmokeWatch smoke detector is designed to operate effectively with smoldering and rapidly growing fires and contains the ability to annunciate fault ensuring no undisclosed failures. The VDOT-U5015 Smoke Detector outputs include 0-20 mA, a localized LED, and relays.

Typical applications that use the VDOT-U5015 include:

- Combustible storage facilities
- Munitions manufacturing
- Volatile chemical storage
- Chemical processing plants
- petroleum refineries
- turbine enclosures
- Battery rooms
- HVAC applications

The hot-swappable sensor module is intrinsically safe and allows live maintenance while under power, without de-classifying the hazardous area. The integrated junction box is available in a variety of port configurations for simplified wiring and installation. See Figure 1 for all the U5015 Smoke Detector components.



Highlights

U5015 TECHNOLOGY FEATURES

- FM Approved for use in Class I, Deivision 1, and Zone 1 hazardous locations
- FM Approved for smoke detection performance
- IECEx Zone approved
- Trouble-free photoelectric operation
- 0-20 mA output for DCS integration
- Self-checking circuitry ensures reliable smkoe detection
- Alarm, Auxiliary, and Fault relays for controlling annunciating devices or fire panel interface
- LED provides a visual indication that an alarm has occured
- IP44 ingress protection level suitable for onshore or offshore requirements

BENEFITS

- Ideally suited for classified areas in the petrochemical, oil, and gas industry
- DCS, PLC, integration with milliamp, or relay outputs
- Rugged design for environmental extremes
- Visual confirmation of detector alarm
- Detects smoldering fires
- No undisclosed failures
- Able to mount on exterior of duct (with Q5016)

NOT TO BE USED FOR INSTALLATION PURPOSES.
Velocity reserves the right to make changes at any time without notice in prices, colours, materials, components, equipment, specifications and models and also to discontinue models.

Specifications

Operating Voltage	12-30 Vdc (24 Vdc nominal)
Power Consumption	3.5 watts maximum (2.75 watts at 24 Vdc)
Output Relays	Smoke alarm relay, Form C, 5 amperes at 30 Vdc: The smoke alarm relay has normally open/ normally closed contacts and normally de-energized operation. Fault relay, Form A, 5 amperes at 30 Vdc: The fault relay has normally open and normally energized operation. Auxiliary relay, Form C, 5 amperes at 30 Vdc: The auxiliary relay has normally open/ normally closed contacts and normally de-energized operation.
Temperature Range	Operating: -20°C to +65°C (-4°F to +149°F) Storgae: -55°C to +70°C (-67°F to +158°F)
humidity Range	5 to 95% relative humidity
Ingress Protection	IP44 (Applicable to ceiling mount only)
Current Output	0-20 mA (±0.30 mA) dc current, with maximum loop resistance of 300 ohms from 12-17.9 Vdc, 500 ohms from 18 to 19.9 Vdc, and 600 ohms from 20-30 Vdc
Terminals	UL/CSA rated 14-18 AWG or 2.5-0.75 mm^2 wire
Smoke Density	1.5% - 2.5% obscuration per foot (4.9% - 8.2% obscuration per meter)

Thread Options	3/4 inch NPT or M25
Enclosure Material	Polycarbonate / ABS - Smoke Detector Copper-free aluminium (painted) - Junction Box
Shipping Weight Approx)	7.85 lbs (3.56 kg)
Warranty Period	1 Year
Dimensions	See Figure 2
Certification	
FM APPROVED	IEC IECEx
Class 1 Div 1 Groups B, C, D (T4) Class 1 Div 2 Groups A, B, C, D (T4) Class 1 Zone 1 AEX db ia LLC (T4 Gb) Tamb -20°C to +65°C IP44	IECEx FMG15.0014X Ex db ia LLC T4 Gb Tamb - 20°C to +65°C IP44

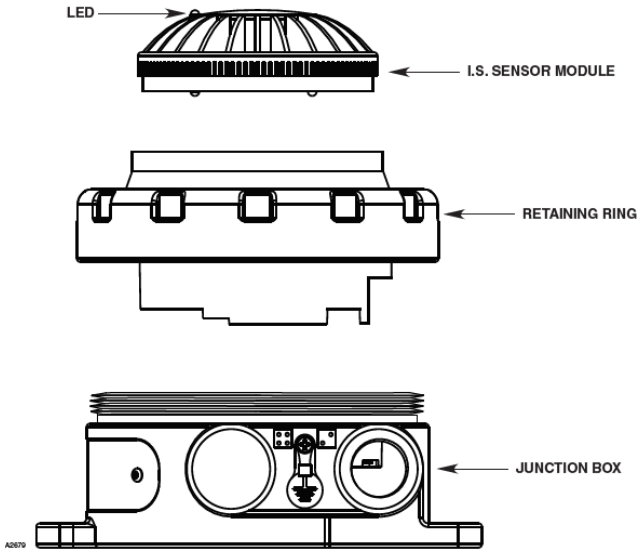

Figure 1—U5015 Components

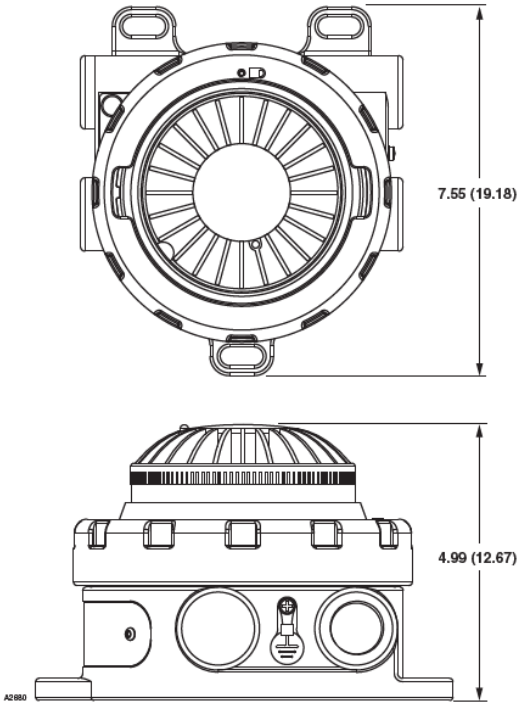

Figure 2—U5015 Dimensions in Inches (cm)

All specifications are subject to change without any notice.
For more information, contact with VELOCITY.

Velocity DETECTION OVER TIME
Zeta Alarms Limited
72-78 Morfa Road, Swansea
SA1 2EN
Tel: +44 1792 455 175 FAX: +44 1792 455 176

Distributed By