Velocity CONTROL PANEL

Installation Manual

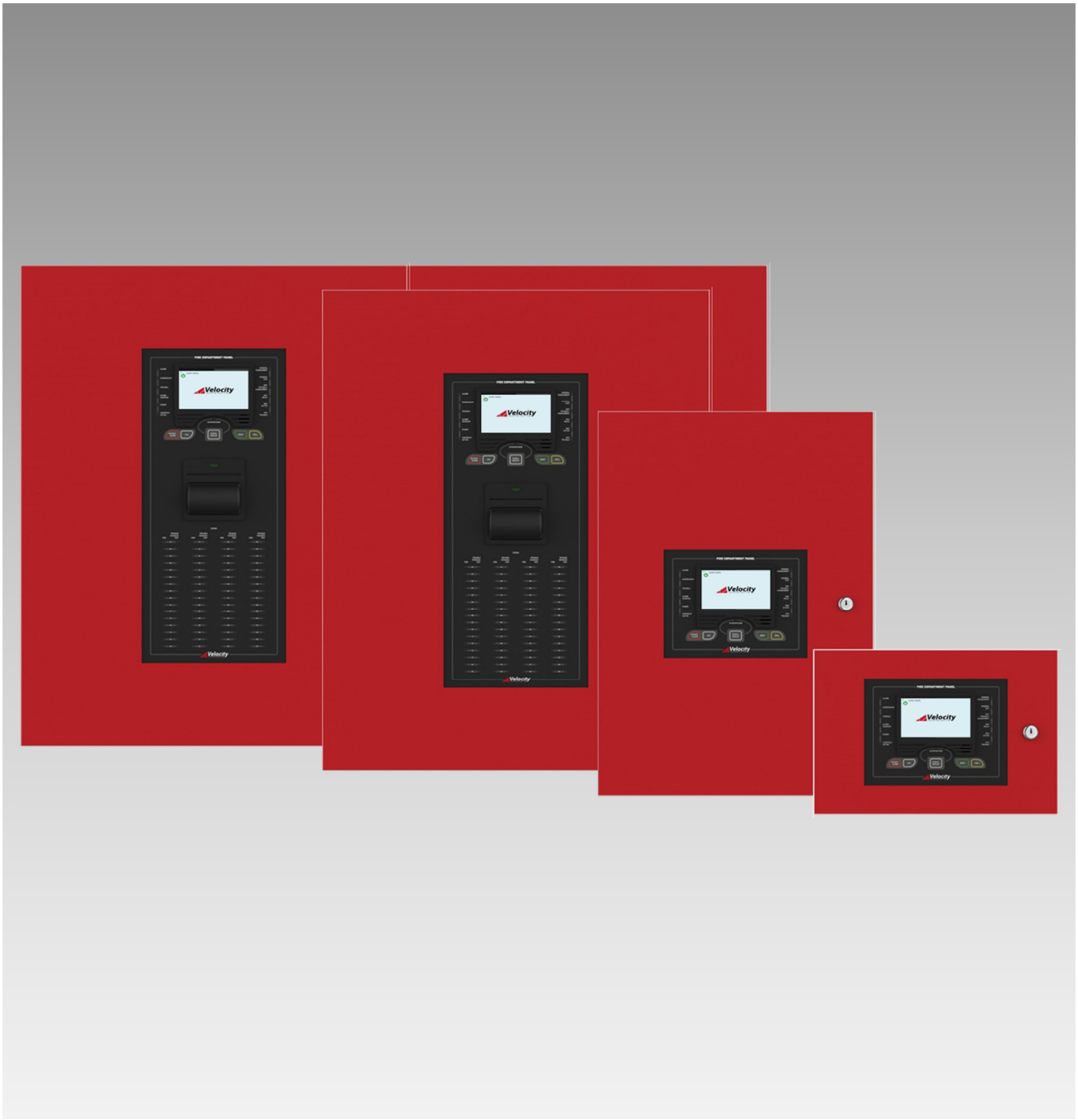

Contents

Introduction 4
About the Velocity Fire Alarm System 4
Overall Features 4
Additional Features 5
Document Conventions 5
Circuits and Zones 5
Wiring Styles 5
System Components 6
Panel Types 6
Panel Modules 8
Control Panel Installation and Dimensions 10
Enclosure Dimensions 100
Panel Construction Details 100
Locating the Fire Alarm Control Panel 111
Mounting the Enclosure 111
Mounting Hole Dimensions 111
Planning Cable Entry 133
Cable Grounding 133
Mains Wiring 133
Battery Wiring 155
Securing the batteries 166
Assembling the MMP panel 18
Initial Power Up 19
Module Installation 19
TRM RJ45 Port Address Designation 20
Securing the modules 20
Before Powering the Panel On 20
Power On Procedure 211
Field Wiring 222
Wiring Overview 222
VL-NCA Field Wiring Connections 233
VL-NCB Field Wiring Connections 244
Wiring recommendations for Notification Appliance Circuits *(VL-NCA & VL-NCB)* 255
VL-NCA & VL-NCB Specifications 255
Compatible Notification Devices 266
Maximum Notification Devices per Circuit 266
VL-MIM Field Wiring Connections 277
Wiring Recommendations for Initiating Device Circuits *(VL-MIM)* 277
VL-MIM Specifications 277
VL-MRM Field Wiring Connections 2828
VL-MRM Specifications 2828

VL-ZMA Field Wiring Connections 29
VL-ZMB Field Wiring Connections 29
Wiring Recommendations for Initiating Device Circuits *(VL-ZMA & VL-ZMB)* 300
VL-ZMA & VL-ZMB Specifications 300
VL-NWM Field Wiring Connections 311
Wiring Recommendations for Network Wiring *(VL-NWM)* 322
VL-NWM Specifications 322
VL-SLC Field Wiring Connections 333
Wiring Recommendations for Signalling Line Circuits *(VL-SLC)* 344
SLC Device Wiring and Device Information 344
VL-SLC Specifications 400
Compatible SLC Devices 400
Power Supply 411
PSU Specifications 411
PSU Fuses. 422
Power Supply Status Indications 422
Power Supply Signals 422
Panel Printer 43
Loading/Replacing Printer Paper Roll 43
Status LED's 44
Printer Maintenance 44
FAULT FINDING 435
Appendix A: SPECIFICATIONS 455
Appendix B: STANDBY BATTERY REQUIREMENTS 466
Appendix C: DEVICE ADDRESS SETTING (VDOT-AD2) 477
Appendix D: PRODUCT CODES 48
Appendix E: Ground Fault Impedance values 49

Introduction

About the Velocity Fire Alarm System

The Velocity Control Panel is a powerful intelligent fire alarm control system with a user friendly 4.3 inch touch screen display, which has been designed to provide reliable life safety and property protection, while also being easy to install, commission and operate. The Velocity system is totally modular which enables it to satisfy any size building fire alarm needs.

By adding intelligent loop modules, the Velocity can be upgraded to support up to 4000 detectors and devices spread across a flexible SLC loops (maximum of sixteen SLC). The system can also be expanded by adding Form C relay output modules, network interface modules, NAC modules, and zone monitor class A & B modules for conventional detectors and devices.

The Velocity system's touchscreen interface is designed to make status information clear, and system control functions simple to operate. Through the use of function buttons on the systems display the user can easily "Acknowledge" events, "Silence" or "Unsilence" building audibles, or "Reset" the system. The system status presentation is structured to allow the different types of system events (Alarms, Supervisory, and Trouble) to be viewed independently. Each system event presents the user with a message describing the location of the alarm report and the type of event (manual alarm, smoke, or heat). If additional details about the nature of the alarm report or its location are required, the user can add a text label to the device or zone.

The 32-bit microcontroller (MCU) at the heart of Velocity, rapidly processes logical decisions based on the status of the smoke detection and other initiating devices to control the system outputs. The Windows based software configuration tool Velocity Connect is used to configure the system's operation based on the customer specified operating requirements, and reduce commissioning/installation times.

The Velocity system continuously checks all software and hardware for proper operation. It checks all control panel electronic hardware, system memory components, and the system program. A hardware watchdog circuit is provided to ensure that System programs are functioning properly. If a problem develops with the program or processor, the watchdog circuit places the System into a trouble condition and resets it.

The Velocity system is equipped with a backup microprocessor on its termination board. To ensure reliable operation, if the main panel's CPU stops, the backup CPU will take over and allow the system to still be able to detect and annunciate alarms.
The fire alarm operation is always processed as the highest priority over all other operating modes.

Overall Features

- Modular construction allows a panel to be specified using just the required modules.
- Up to 4, 6 or 16 SLC modules (depending on panel model).
- 4.3" colour touch screen display.
- Capacity for up to 6 intelligent modules (depending on panel model).
- Full system redundancy.
- Extensive Day/Night mode programming.
- Full cause & effect programming via front of panel or the Velocity Connect PC software.
- 254 Velocity devices per SLC.
- 254 available programmable zones.
- Up to 64 panel peer-to-peer network.
- Positive Alarm Sequence.
- Automatic Drift Compensation.
- Alarm Verification.
- Mains Trouble output delay of up to 30 minutes.
- NAC special application 24V mode.
- 5, 10 or 15 AMP PSU available (depending on panel model).

Additional Features

There is PC configuration software, a mobile monitoring application, a remote annunciator and a LED Expander PCB available.
PC Configuration Software: Velocity Connect
Remote Annunciator: VL-MMP/RA
LED Expansion PCB: VL-MMP/ZLX

Document Conventions

Circuits and Zones

Circuit = this refers to an actual electrical interface, initiating (detection), indicating (signal), or relay.
Zone = this is a logical concept for a fire alarm protected area, and will consist of at least one circuit.
The terms zone and circuit are used interchangeably throughout this manual.
On the Velocity, circuits can be either conventional or addressable inputs or outputs. Both hardwired conventional inputs and outputs, and addressable inputs and outputs may be grouped together to form logical zones.

Wiring Styles

SLC Circuits have a redundant pathway (powered from both sides of the circuit) and are able to be wired either in the Class A designation or in the Class X designation (designed to operate past any a single short circuit with the addition of UL listed isolators).
ZM Circuits are available in two different wiring classes. The VL-ZMA has 1 Class A circuit that has a redundant path to operate past a single open circuit. The VL-ZMB has 2 Class B circuits that do not have a redundant path; they simply terminate at the last device.

NAC Circuits are available in two different wiring classes. The VL-NCA has 1 Class A circuit that has a redundant path to operate past a single open circuit. The VL-NCB has 2 Class B circuits that do not have a redundant path; they simply terminate at the last device.

Typical Velocity Network Fire Alarm Wiring

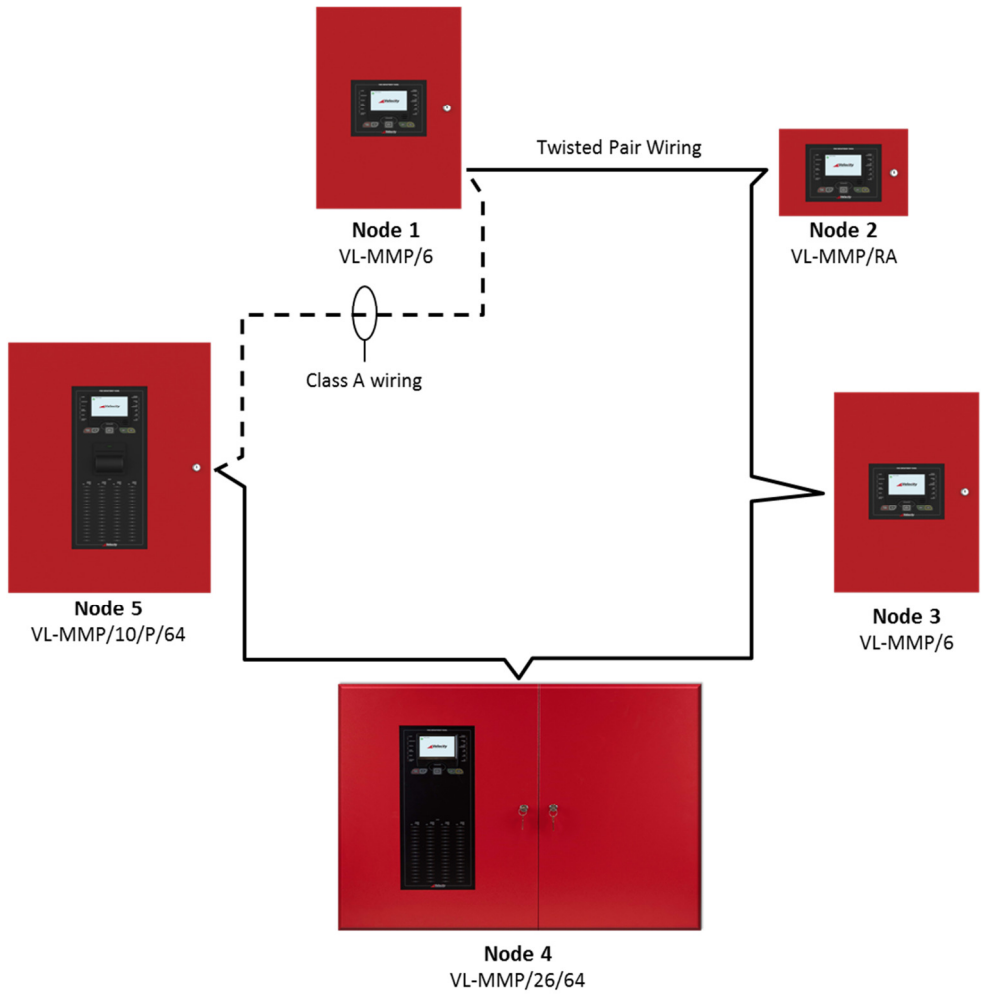

System Components

Panel Types

	Model	Description
	VL-MMP/6	• W:380mm x H:530mm • Space for up to 6 small modules • Supplied with a 5A PSU • Available in black or red • Space for 2 x 12Ah batteries.
	VL-MMP/10	• W:500mm x H:600mm • Space for up to 10 small modules • Supplied with a 10A PSU • Available in black or red • Space for 2 x 17Ah batteries
	VL-MMP/10/64	• W:500mm x H:600mm • Space for up to 10 small modules • Equipped with 64 zone LED expansion • Supplied with a 10A PSU • Available in black or red • Space for 2 x 17Ah batteries
	VL-MMP/10/P	• W:500mm x H:600mm • Space for up to 10 small modules • Equipped with UL listed panel printer • Supplied with a 10A PSU • Available in black or red • Space for 2 x 17Ah batteries
	VL-MMP/10/P/64	• W:500mm x H:600mm • Space for up to 10 small modules • Equipped with UL listed panel printer • Equipped with 64 zone LED expansion • Supplied with a 10A PSU • Available in black or red • Space for 2 x 17Ah batteries

	VL-MMP/26	• W:1000mm x H:665mm • Space for up to 26 small modules • Supplied with a 15A PSU • Available in black or red • Space for 2 x 38Ah batteries
	VL-MMP/26/64	• W:1000mm x H:665mm • Space for up to 26 small modules • Equipped with 64 zone LED expansion • Supplied with a 15A PSU • Available in black or red • Space for 2 x 38Ah batteries
	VL-MMP/26/P	• W:1000mm x H:665mm • Space for up to 26 small modules • Equipped with UL listed panel printer • Supplied with a 15A PSU • Available in black or red • Space for 2 x 38Ah batteries
	VL-MMP/26/P/64	• W:1000mm x H:665mm • Space for up to 26 small modules • Equipped with UL listed panel printer • Equipped with 64 zone LED expansion • Supplied with a 15A PSU • Available in black or red • Space for 2 x 38Ah batteries
	VL-MMP/RA	• W:300mm x H:200mm • Velocity Remote Annunciator • Please refer to GLT-261-7-3 Velocity MMP Repeater Manual for further information

All panel versions are also available in black.

Model	Description
VL-MMP/6-B	Velocity MMP 6 expansion port panel, Black
VL-MMP/10-B	Velocity MMP 10 expansion port panel, Black
VL-MMP/10-B/64	Velocity MMP 10 expansion port panel, with zonal LED indication, Black
VL-MMP/10-B/P	Velocity MMP 10 expansion port panel, with built in printer, Black
VL-MMP/10-B/P/64	Velocity MMP 10 expansion port panel, with zonal LED indication and built in printer, Black
VL-MMP/26-B	Velocity MMP 10 expansion port panel, Black

VL-MMP/26-B/64	Velocity MMP 10 expansion port panel, with zonal LED indication, Black
VL-MMP/26-B/P	Velocity MMP 10 expansion port panel, with built in printer, Black
VL-MMP/26-B/P/64	Velocity MMP 10 expansion port panel, with zonal LED indication and built in printer, Black
VL-MMP/RA-B	Velocity MMP Remote annunciator, Black

Panel Modules

	Model No.	Description	Technical
	VL-SLC	Signaling Line Circuit Module The plug-in SLC module provides power for, and handles communications to the analogue addressable devices. It has 4 trouble status LED's for added fault finding assistance.	Maximum SLC Current: 500mA Maximum SLC Capacity: 254 Addresses Maximum SLC Length: 2KM Maximum SLC Resistance: 22Ω + to +, 22Ω - to -) Maximum SLC Capacitance: 100nF Maximum SLC Baud Rate: 4334 bits per second Wiring Class: Class A or Class X Compatible Devices: VDOT-PY, VDOT-PYH, VDOT-S6, VDOT-SCI, VDOT-SCM-SCI, VDOT-ZMU-SCI, VDOT-DIP-SCI, VDOT-DOP-AC240V-SCI, VDOT-DOP-SCI, VDOT-DPH, VDOT-H2, VDOT-MinilP
	VL-NCA	Notification Appliance Circuit Module (Class A) The plug-in NAC module provides power for, and handles the operation for the non-addressable notification appliances (horns and sirens). It has 1 x class A circuit and can be programmed to provide a 24VDC auxiliary output.	NAC Voltage: 29VDC Nominal Maximum NAC Current: 1A Maximum NAC Impedance: 4Ω Maximum NAC Length: Depends on AWG Wiring Class: Class A [Power limited & Supervised] Special Applications: Auxiliary 24 VDC Output [Power limited & Unsupervised] Compatible Devices: VL-MH, VL-W-C, VL-W-M, VL-W-CS-W, VL-W-CS-R, VL-C-CS-W, VL-C-CS-R, VL-W-MS-R, VL-W-MS-W, VL-C-MS-R, VL-C-MS-W, VL-W-S-W, VL-W-S-R, VL-C-S-W, VL-C-S-R.
	VL-NCB	Notification Appliance Circuit Module (Class B) The plug-in NAC module provides power for, and handles communications to the non-addressable notification appliances (horns and sirens). It has 2 x class B circuits and can be programmed to provide two 24v DC auxiliary outputs.	NAC Voltage: 29VDC Nominal Maximum NAC Current: 500mA **per circuit** Maximum NAC Impedance: 4Ω Maximum NAC Length: Depends on AWG Wiring Class: 2 x Class B [Power limited & Supervised] Special Applications: Auxiliary 24 VDC Output [Power limited & Unsupervised] End of Line Resistor: 4K7Ω Compatible Devices: VL-MH, VL-W-C, VL-W-M, VL-W-CS-W, VL-W-CS-R, VL-C-CS-W, VL-C-CS-R, VL-W-MS-R, VL-W-MS-W, VL-C-MS-R, VL-C-MS-W, VL-W-S-W, VL-W-S-R, VL-C-S-W, VL-C-S-R.
	VL-MRM	Multi Relay Module – Form C A Relay module that is designed to be DIN mounted inside of a Velocity control panel. It's powered and interfaced to the CIE via a RJ45 connection. Can be configured as a programmable relay or a common alarm, common trouble or common supervisory relay via the panel settings.	Relay Type: Form C x 3 Switching Capacity: 5 A, 30 VDC (resistive) 5 A, 250 VAC (general use) Quiescent Current @ 30V: 39.3mA Relay Operated Current (LEDs ON): 115.26mA

	VL-NWM	Network Module The Velocity system network has the facility to monitor, indicate and control the functions of a fire alarm installation, thus allowing signals to be distributed around a large site. The network will accommodate up to 64 nodes. The network uses RS485 data communication.	Communication Protocol: RS485 Maximum Network Size: 64 Nodes Maximum Distance Between Nodes: 1KM (using a screened data cable) or 100M (using a standard fireproof cable) Network Wiring Typologies: Bus or Ring NOTE: Only 1 network module allowed per panel. If a second module is fitted, it will be powered down when the panel starts.
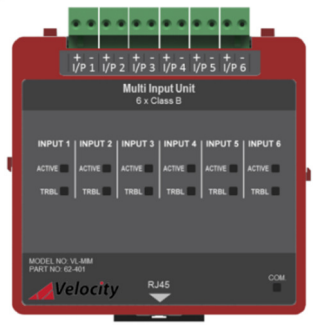	VL-MIM	Multi Input module (Class B) An input module that is used to monitor and raise alarm from any ancillary equipment such as sprinkler flow switch, aspiration detectors, secondary fire control panel, beam detectors, external power supplies etc.	Input Voltage: 23.7VDC Nominal Wiring Class: Class B x 6 Quiescent Current @ 30V: 39.3mA Input Max Impedance: 10Ω Input End of Line: 4K7Ω Alarm Triggering Resistor: 1KΩ
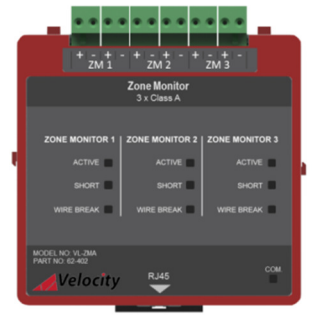	VL-ZMA	Zone Monitor (Class A) A zone monitor that can be typically used for conventional devices and/or for special detectors that are not available in addressable form. It has 3 x Class A input circuits.	Zone Voltage 29VDC Wiring Class: Class A x 3 [Power limited & Supervised] Zone Maximum Line Impedance: 10Ω Alarm Triggering Resistor: 1KΩ Compatible Detectors: Nittan EVCA-P (UL268 Listed)
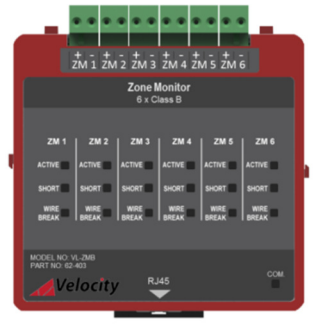	VL-ZMB	Zone Monitor (Class B) A zone monitor that can be typically used for conventional devices and/or for special detectors that are not available in addressable form. It has 6 x Class B input circuits.	Zone Voltage: 26VDC Nominal Wiring Class: Class B x 6 [Power limited & Supervised] Zone Maximum Line Impedance: 10Ω End of Line Resistor: 4K7Ω Alarm Triggering Resistor: 1KΩ Compatible Detectors: Nittan EVCA-P (UL268 Listed)

Control Panel Installation and Dimensions

Enclosure Dimensions

See table 1 for full dimensions see table 1.

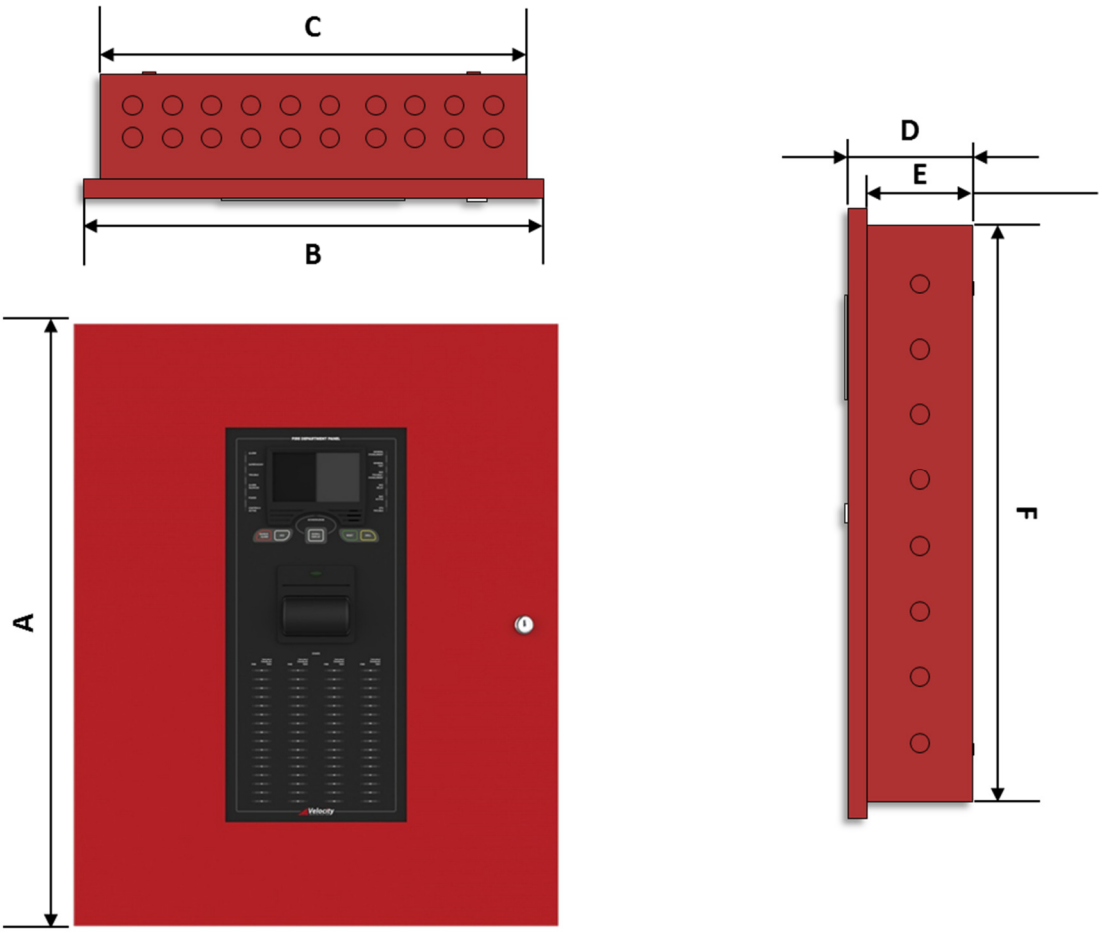

Table 1

Panel	A	B	C	D	E	F	Top Knock outs	Side Knock outs	Bottom Knock outs	Max Battery Size
VL-MMP/6	535mm	385mm	355mm	150mm	120mm	505mm	18	12	4	2 x 12Ah
VL-MMP/10	665mm	535mm	505mm	200mm	170mm	635mm	26	8	4	2 x 38Ah
VL-MMP/26	665mm	975mm	945mm	200mm	170mm	635mm	64	28	20	2 x 65Ah

Panel Construction Details

All components are manufactured from Zintec.

Large and Medium MMP Enclosures
- Back box and door 1.5 mm
- Door plate 0.9 mm
- All internal parts are 0.9 mm

Small MMP
- All parts are 0.9 mm

Repeater MMP
- All parts 0.9 mm.

The paint colour for the main box and door is RAL3020 Red Leatherette (Red Version) or RAL9005 Black Leatherette (Black version). The internals are RAL9005 Black Leatherette.

The control cabinet can be semi flushed into a wall or surface mounted.

Locating the Fire Alarm Control Panel

The control panel should be installed per NFPA 70 and NFPA 72 recommendations: -

The panel should be close to the main entrance of the building, so that it can be viewed by any fire-fighting personnel entering the building.

- It should be fitted to a sturdy wall that will not flex unnecessarily.
- It should ideally be mounted at eye level, for it to be viewed without need of a ladder.
- It should be installed in a dry, weatherproof place, preferably NOT in direct sunlight.
- It should be easily accessible, so that the responsible person can perform their regular fire alarm checks.

The panel must be in a clean, dry position, which is not subject to excessive shock or vibration and at least 2 meters away from pager systems or any other radio transmitting equipment. The operating temperature range is 0°C (32°F) to 49°C (120°F); maximum humidity is 95%.

Mounting the Enclosure

Fix the enclosure to the wall using all the mounting points provided:
MMP6: 4 x Mounting Points. See Fig 1
MMP10: 4 x Mounting Points See Fig 2
MMP26: 6 x Mounting Points. See Fig 3
Check the build and condition of the wall to decide a suitable screw fixing. The mounting holes are designed for No 8 roundhead or countersunk woodscrews (or similar). Remove any debris from the enclosure. Take care not to damage the FACP during installation.

ATTENTION: DO NOT DRILL ANY ENTRY HOLES INTO THE PSU SECTION OF THE ENCLOSURE WHICH IS LOCATED ON THE LEFT-HAND SIDE OF THE CONTROL PANEL CABINET.

Mounting Hole Dimensions

Fig 1

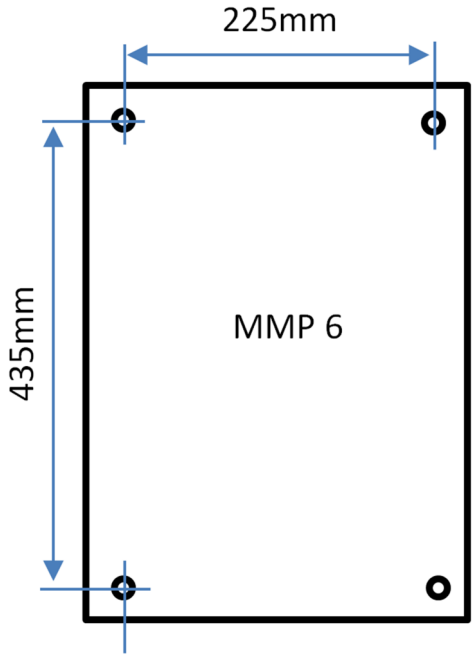

Fig 2

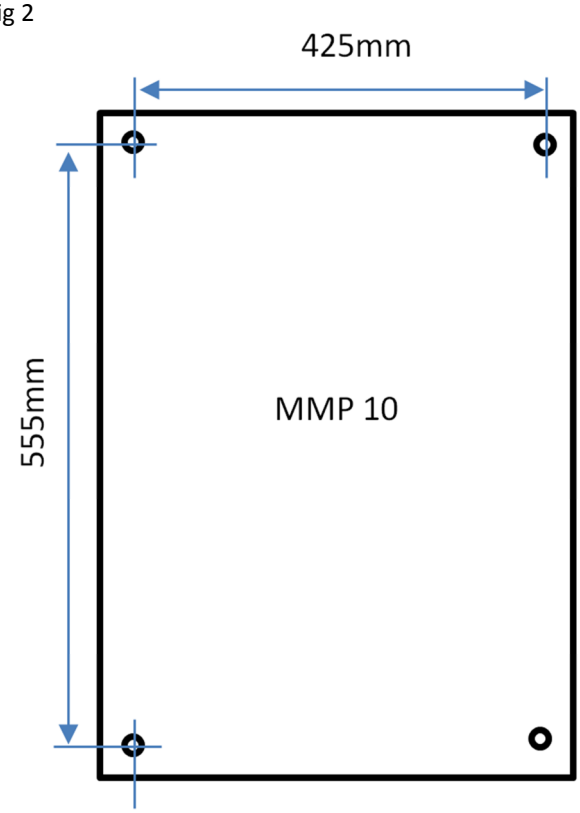

Fig 3

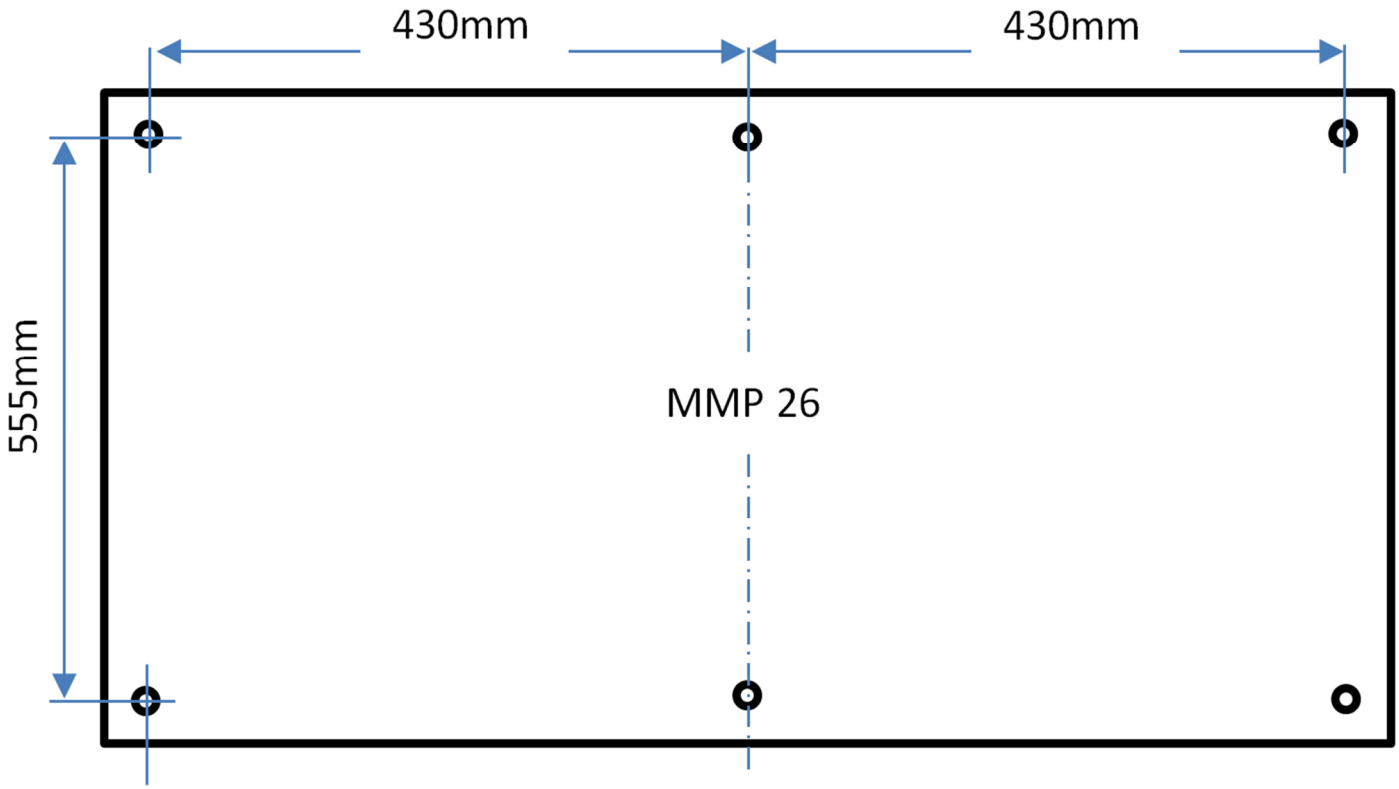

Planning Cable Entry

The Knock-out cable entries can be easily removed by Tapping with a suitable screwdriver or chisel from outside the control panel box. Alternatively, the entry can be drilled out, using a 20mm hole cutter. Care should be taken if using a drill. Consider removing the PCBs to prevent damaging them.

The VELOCITY MMP comes with many cable entry holes. If another entry hole is required, it is strongly recommended that the panel door is removed to avoid accidental damage. Also, the power supply and termination board should be removed and stored in a safe place. This would also help while fixing the back box to the wall.

ATTENTION: DO NOT DRILL ANY ENTRY HOLES INTO THE PSU SECTION OF THE ENCLOSURE.

Cable Grounding

The MMP panel provide earth bars located along the top of the panel for grounding incoming wiring if needed.

The MMP 6 panel has 1 x 12 way Earth bar

The MMP 10 panel has 2 x 12 way Earth bar

The MMP 26 panel has 3 x 12 way Earth bar

Mains Wiring

Note: *The AC (mains) input wiring, and the back-up battery connections are non-power-limited. All other connections on the MMP panel are power limited. Ensure that a minimum ¼" separation exists between non-power-limited and power-limited circuits.*

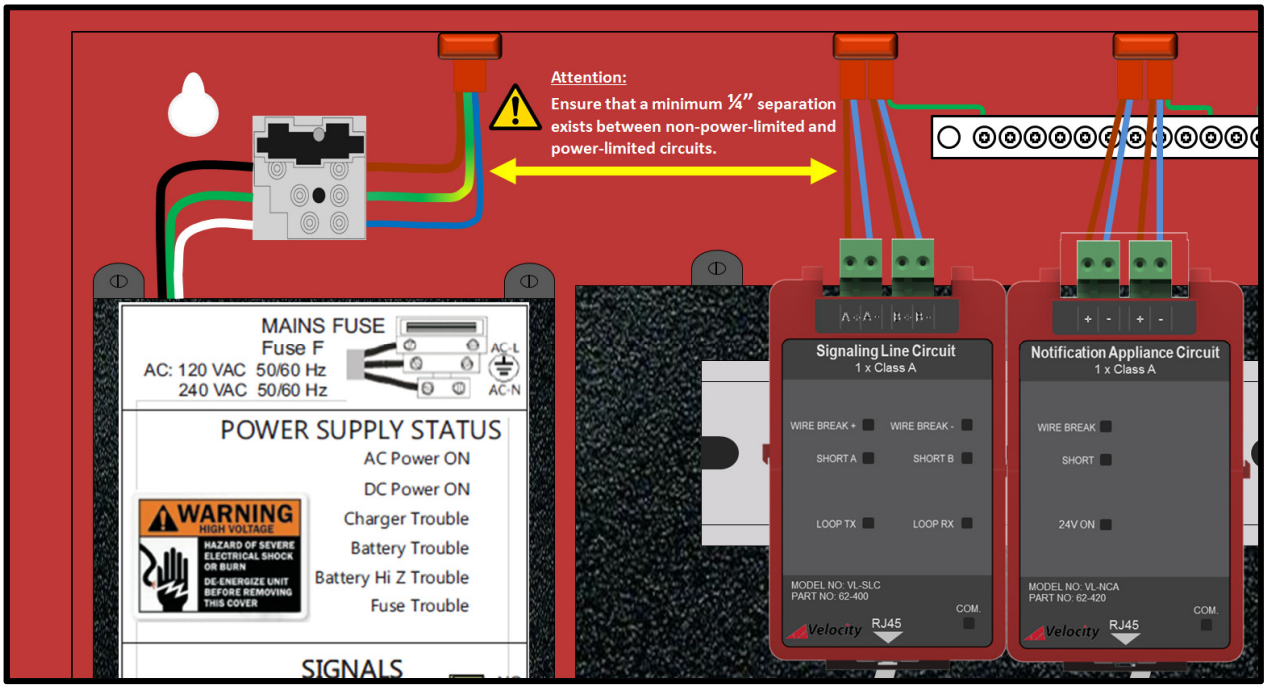

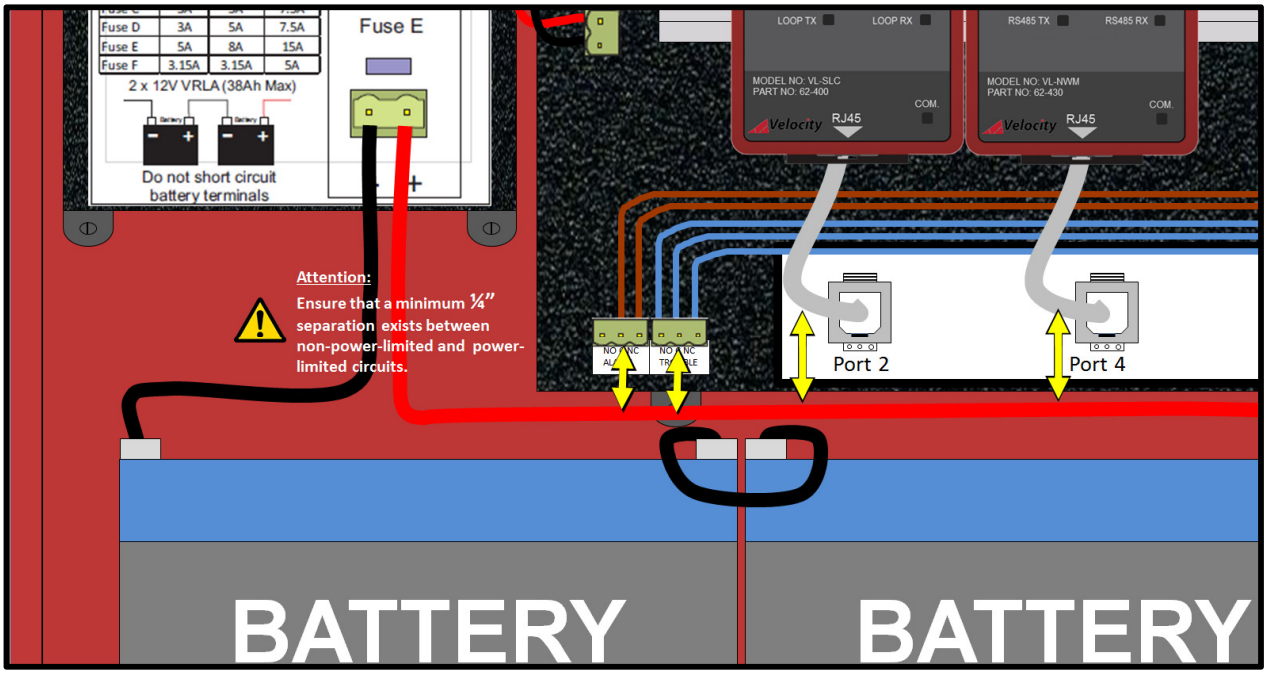

Recommendations

The Mains supply to the FACP is fixed wiring, using Fire resisting 3-core cable (Between 1 mm² and 2.5mm²), or equivalent, fed from an isolating double pole switch fused spur, and fused at 5A. This should be secure from unauthorized operation and be marked 'FIRE ALARM: DO NOT SWITCH OFF'. The supply must be exclusive to the Fire Panel.

Connecting the Mains Power

The AC Live (L), Earth (E) and Neutral (N) connections are marked on the power supply cage. It is essential that the mains Earth cable is connected to the PSU's Earth terminal. The incoming mains cable should be kept separate from the SLC cables to help minimise mains interference.

ATTENTION: MAKE SURE ANY SPARE ENTRY HOLES THAT HAVE BEEN OPENED, BUT NOT USED ARE COVERED WITH SUITABLE GROMMETS OR BLANKING SCREWS.

It is advisable to apply power to the panel before connecting any devices, to check for correct operation, and to familiarise yourself with the fire alarm panels controls.

If a knockout is removed, fill the hole with a suitable cable gland. If any knockout is removed, but subsequently not used, it should be covered up.

The AC Mains cable must be fed into the enclosure via one of the cable entries at the top left corner of the back box (Refer to Figure 3 below).

Figure 3: Wiring the mains power supply

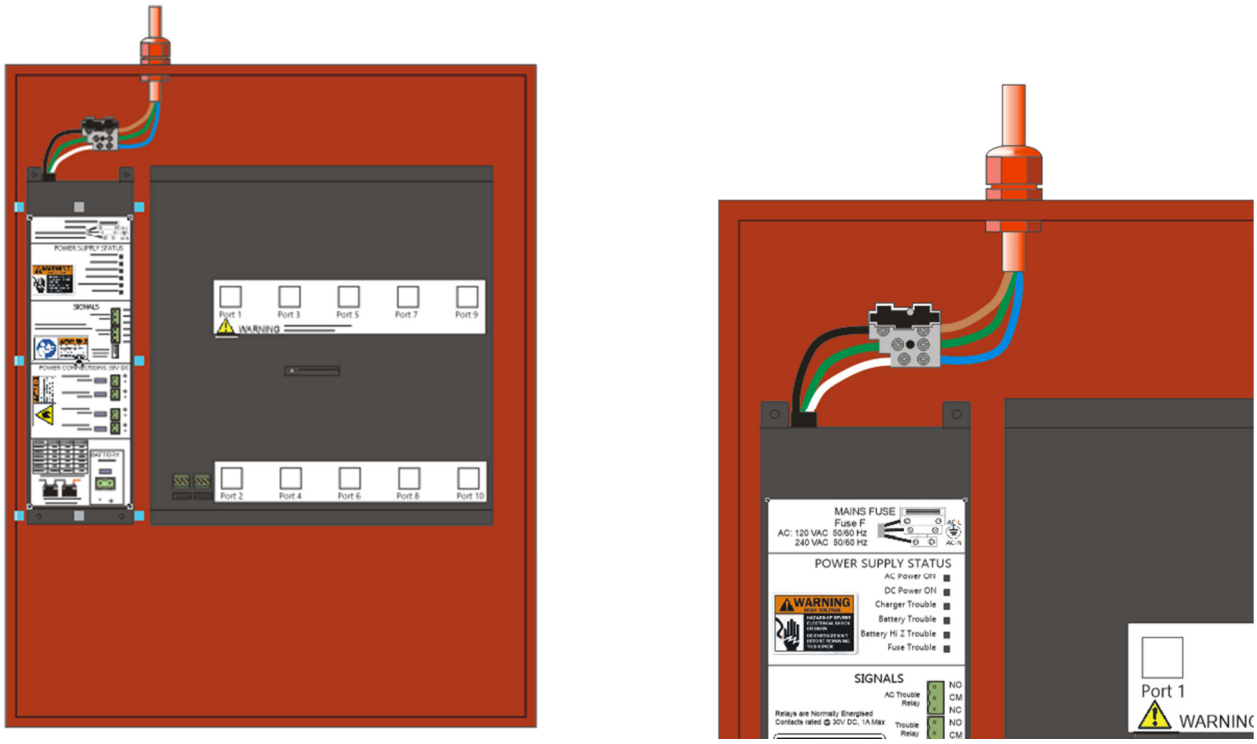

Panel	Input Voltage	Input Frequency	PSU Cage Size	Max Input Current	Max Surge current	Fuse Installed
VL-MMP/6	120-240V AC	47-63 Hz	150W	1.4Amax@120Vac & Full-Load, 0.75Amax@220Vac & Full-Load	65A peak, 1.2ms duration, <0.25A2s@230Vac, Cold Start	3.15A
VL-MMP/10	120-240V AC	47-63 Hz	240W	2.2Amax@120Vac & Full-Load, 1.1Amax@220Vac & Full-Load	65A peak, 1.2ms duration, <0.25A2s@230Vac, Cold Start	3.15A
VL-MMP/26	120-240V AC	47-63 Hz	400W	3.6Amax@120Vac & Full-Load, 2.0Amax@220Vac & Full-Load	65A peak, 1.2ms duration, <0.25A2s@230Vac, Cold Start	5A

Battery Wiring

The Velocity MMP panel uses two 12 Volt batteries, wired in series to give a 24 Volt back-up supply.
The **+ve** of one battery is connected to the **red** battery lead.
The **–ve** of the other battery is connected to the **black** battery lead.
The –ve of the first battery is connected to the +ve of the second battery using the link wire supplied.

Recommended Battery Types:

Panel	Recommended Battery size
VL-MMP/6	2 x Powersonic 12V,12Ah
VL-MMP/10	2 x Powersonic 12V,38Ah
VL-MMP/26	2 x Powersonic 12V,65Ah

To calculate the required backup battery capacity, use the information in Appendix B

Other makes and sizes of battery may be suitable. Calculate the standby requirements to determine the most suitable size of battery

Figure 4: Battery location and connection

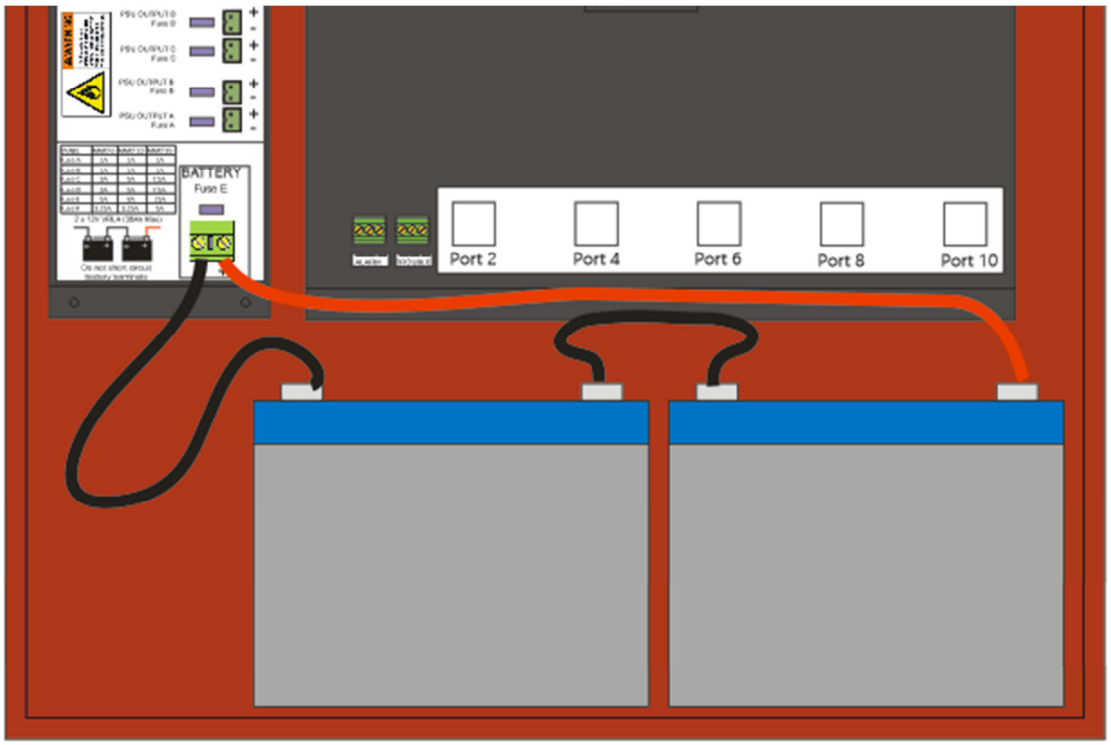

Panel	Charger Boost Voltage	Charger Float Voltage	PSU Cage Size	Max Charger Current	Max Battery Size	Fuse Installed
VL-MMP/6	29.5V DC	27.6V DC	150W	1.1A	2 x 12V, 12 Ah	5A
VL-MMP/10	29.5V DC	27.6V DC	240W	2.2A	2 x 12V, 38 Ah	8A
VL-MMP/26	29.5V DC	27.6V DC	400W	2.2A	2 x 12V, 65 Ah	15A

Securing the batteries

The MMP panel has been designed so that the batteries are secured in the panel with Velcro strips.

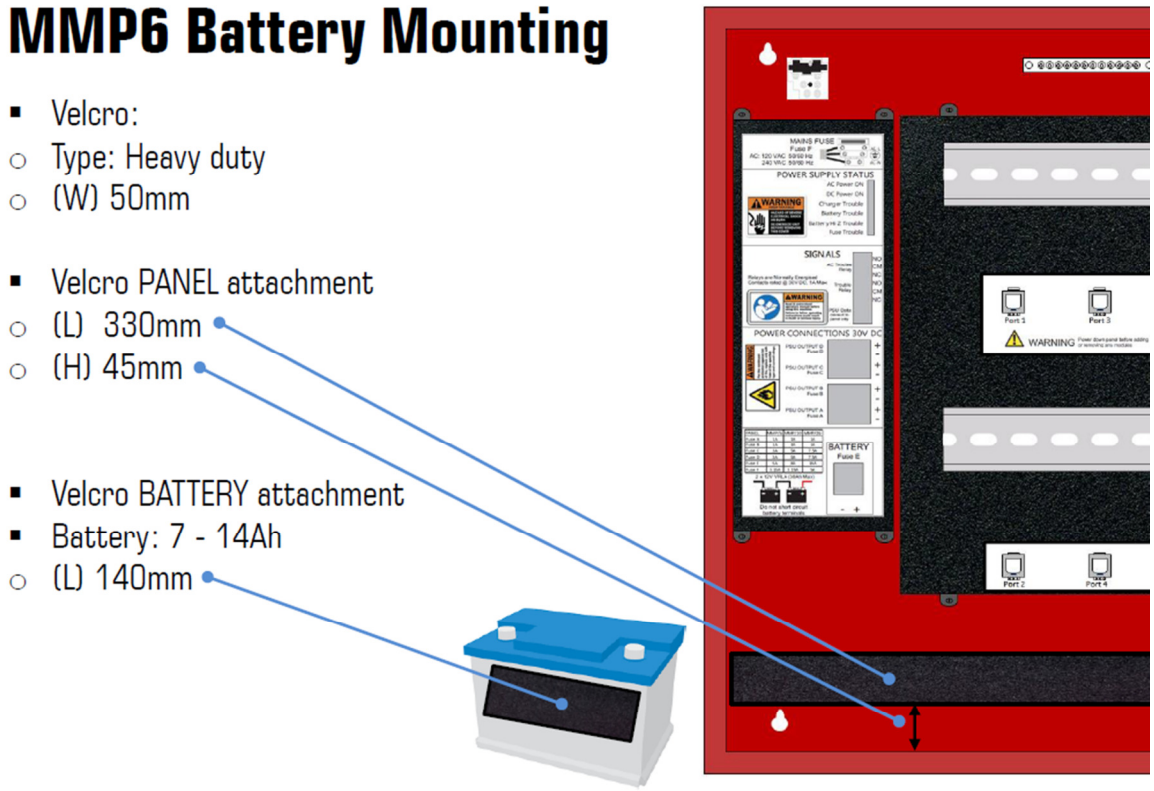

MMP10 Battery Mounting

- Velcro:
  - Type: Heavy duty
  - (W) 50mm
- Velcro PANEL attachment
  - (L) 480mm
  - (H) 45mm
- Velcro BATTERY attachment
- Battery: max 38Ah
  - (L) back: 180mm
  - (L) bottom: 110mm

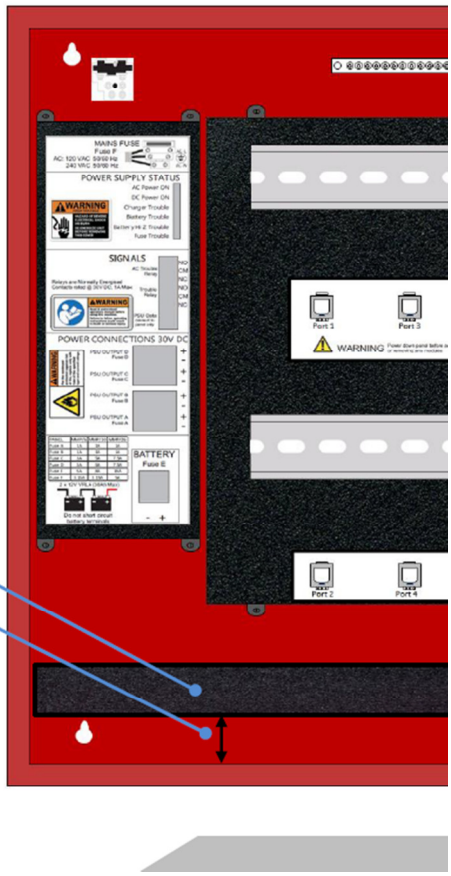

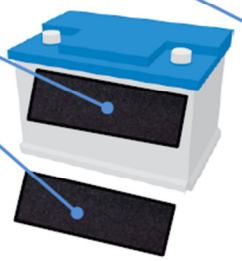

MMP26 Battery Mounting

- Velcro:
  - Type: Heavy duty
  - (W) 50mm
- Velcro PANEL attachment
  - (L) 900mm
  - (H) 45mm
- Velcro BATTERY attachment
- Battery: max. 65 AH
  - (L) back: 280mm
  - (L) bottom: 200mm



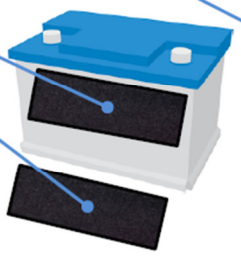

Assembling the MMP panel

The Velocity MMP is a modular panel, designed to be flexible to install. It will normally be supplied as the base panel with a number of expansion modules packed separately. The Modules are Din Rail Mounted, and connect to the panel's motherboard with a small RJ45 cable (supplied with the module). The Base panel is available in 3 sizes:

MMP6

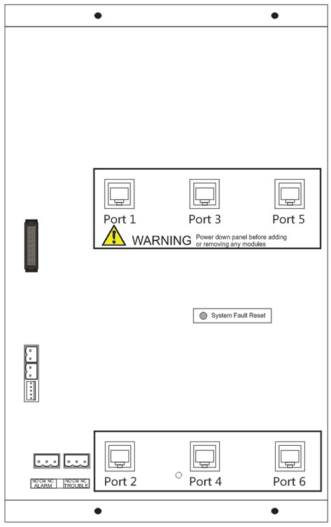

MMP10

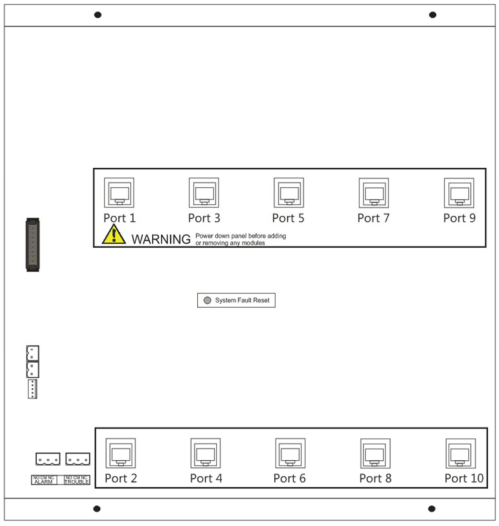

MMP26

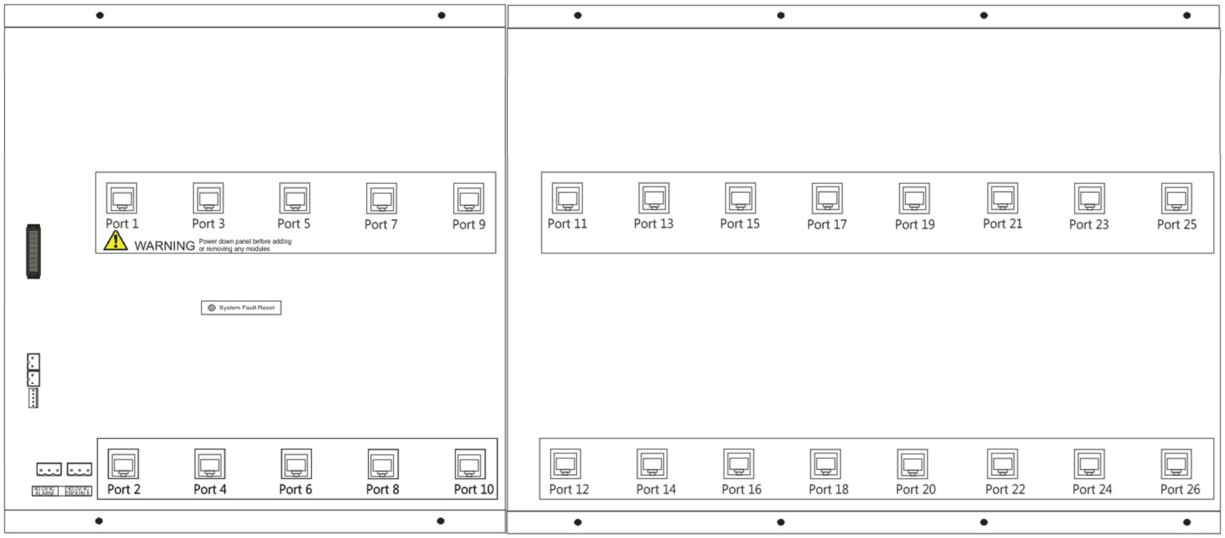

The above diagrams show the port addresses for each panel size

A typical panel set up would include:-

At least one module for initiating devices (Either a conventional zone module, VL-ZMA or VL-ZMB, or an addressable loop (VL-SLC signalling line circuit module)
At least one Notification Appliance module (VL-NCA or VL-NCB)

Initial Power Up

It is recommended to initially power up the panel with no modules connected to confirm that the base panel is functioning as expected. To do this:-

1. Check that the AC cable is connected correctly and the proper grounding has been made.
2. Close the panel door
3. Turn on the mains power. The following will be observed:-
    a. Power, Trouble and CPU trouble LEDs will light for around 6 seconds
    b. Trouble and CPU trouble LEDs will turn off. Power Led will blink a few times
    c. LCD will show touch for calibration. Press the screen within 3 seconds to perform a screen calibration. (The screen is calibrated at the factory, so this step is not usually required)
    d. The LCD shows the velocity logo for a few seconds, while it checks to see what modules are fitted. (Note: the usual "System Healthy" banner is not shown during the module check.)
    e. If the panel finds no modules, it displays "no modules" on its LCD


No Modules

    f. The panel has passed its power on test, so can now be turned off for modules to be fitted.

Module Installation

The MMP panel uses the expansion port number to reference modules. It is recommended that any SLC modules are fitted first to the first expansion ports, so that the loop circuit numbers follow a logical sequence (loop 1 in port 1, loop 2 in port 2 etc.)

ATTENTION: THE PANEL MUST BE POWERED DOWN, AND DISCONNECTED FROM THE BATTERIES BEFORE INSTALLING OR REMOVING ANY MODULES.

1. Ensure that the installation area is free from any cables or wires that may get caught, and that there is enough space on the DIN rail to mount the module. Also ensure that the DIN clip underneath the module is in the open position.
2. Place the module onto the DIN rail, hooking the metal earth clip underneath onto the rail first.
3. Once the earth clip is hooked, push the bottom of the module onto the rail so that the module sits flat.
4. Push the plastic DIN clip (located at the bottom of the module) upwards to lock and secure the module into position.

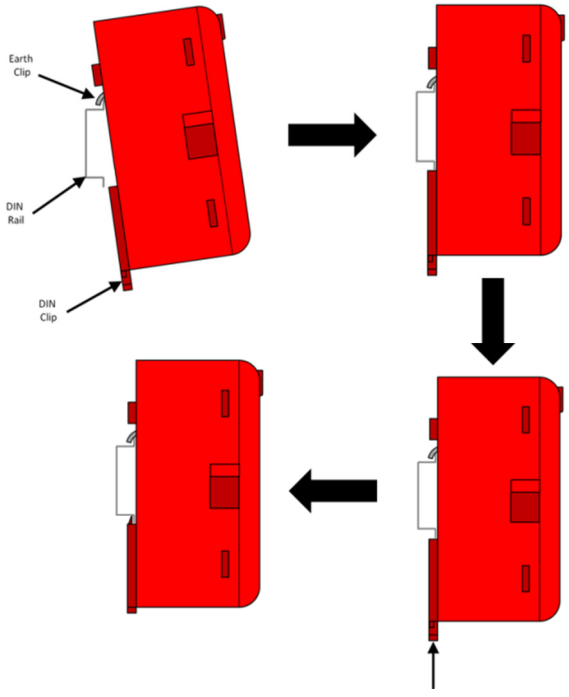

Viewed from the side

5. Once the module is secured to the DIN rail, simply connect the supplied CAT5E cable to the module's RJ45 port.
6. Connect the other end of CAT5E cable to the nearest unoccupied RJ45 port on the termination PCB.

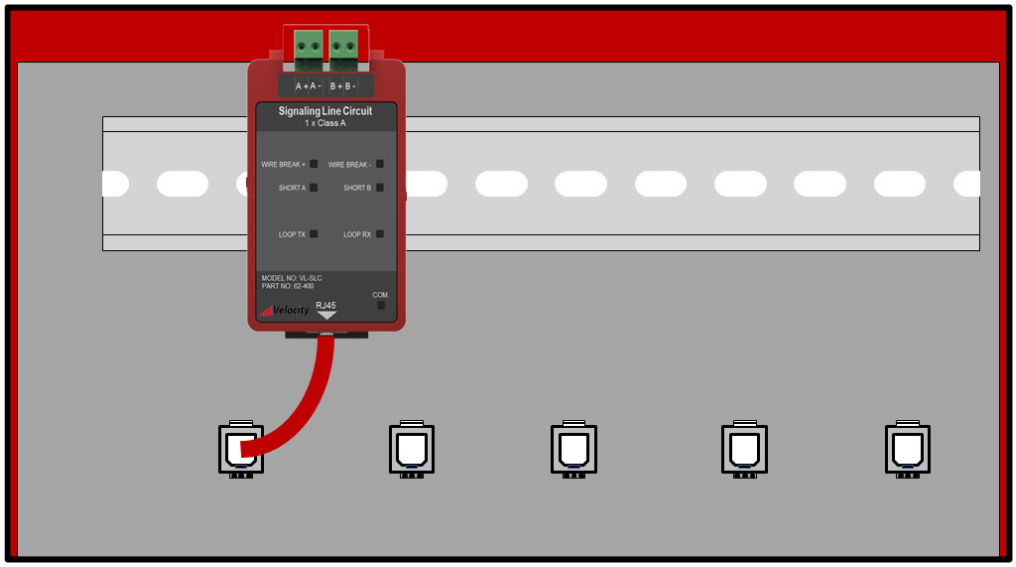

TRM RJ45 Port Address Designation

Each RJ45 port on the Velocity termination has its own unique port address. This port address is important to keep note of as it is displayed on Alarm/Trouble messages and is used when configuring or setting up cause and effects on the panel (See operation manual GLT-261-7-2).

Securing the modules

The modules are designed to clip together to make them more secure. In addition, the MMP panel is supplied with Din rail stoppers. These should be fitted before the first module, and after the last module on each rail.

Before Powering the Panel On

1. To prevent the risk of a spark, do not connect the batteries. Only connect the batteries after powering on the system from its main AC supply.
2. Check that all external field wiring is clear from any open, shorts and ground faults.
3. Check that all the modules have been installed properly, with correct connections and placement
4. Check that all switches and jumper links are at their correct settings.
5. Check that all interconnection cables are plugged in properly, and that they are secure.
6. Check that the AC power wiring is correct.
7. Ensure that the panel chassis has been correctly earth grounded (See NFPA 70).
8. Before powering on from the main AC supply, make sure that the front panel door is closed.

Power on Procedure

1. After the above has been completed, turn the panel on (Via AC Only). The panel will follow the same power up sequence described in initial power up section above
2. The panel will now display one of the following messages

Message	Meaning
 No Modules	The Panel has not detected any modules fitted during its power up check. Power down the panel and check that the expected modules are fitted, and that all module cables are correctly inserted. Note that the panel will need at least one module fitted to run.
001 New module : SOUNDER CLASS A 002 Empty port 003 Empty port 004 Empty port 005 Empty port	The panel has detected a new module added to a port that was previously empty. This is the usual message seen the first time a panel is configured
001 Changed module : SOUNDER CLASS A 002 Empty port 003 Empty port 004 Empty port 005 Empty port	The panel has detected a different type of module fitted to a port that was previously occupied.
001 Serial Number Changed : LOOP 002 Empty port 003 Empty port 004 Empty port 005 Empty port	The panel has detected a module fitted to a port that is the same type, but it`s serial number has changed. This could happen if a loop module was swapped with another one, for example.
001 Removed Module : LOOP 002 Empty port 003 Empty port 004 Empty port 005 Empty port	The panel has detected no module fitted to a port that was previously occupied.

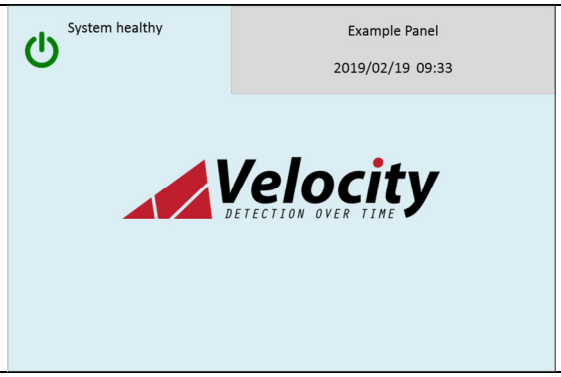	The panel has detected no module changes, so has powered up and started running

1. Check that the module configuration is as expected using the ⮝ and ⮟ to navigate the through the port numbers. Press the ✓ icon to confirm the changes.
2. The new module is now configured into the panel and is ready for use.
3. Since the batteries are not connected, the panel will report them as removed, lighting the yellow “Trouble” LED, intermittently sounding the trouble buzzer, and displaying battery removed message on the screen.
4. Connect the batteries, ensuring that the polarity is correct (Red wire = +ve) & (Black wire = -ve). Acknowledge the trouble event via the display screen, and reset the panel to clear the battery fault.
5. The panel should now remain in the normal condition, and you can configure the panel as normal.

Field Wiring

NOTE: *The terminal blocks are removable to make wiring easier.*

ATTENTION: DO NOT EXCEED POWER SUPPLY RATINGS, OR MAXIMUM CURRENT RATINGS.

Wiring Overview

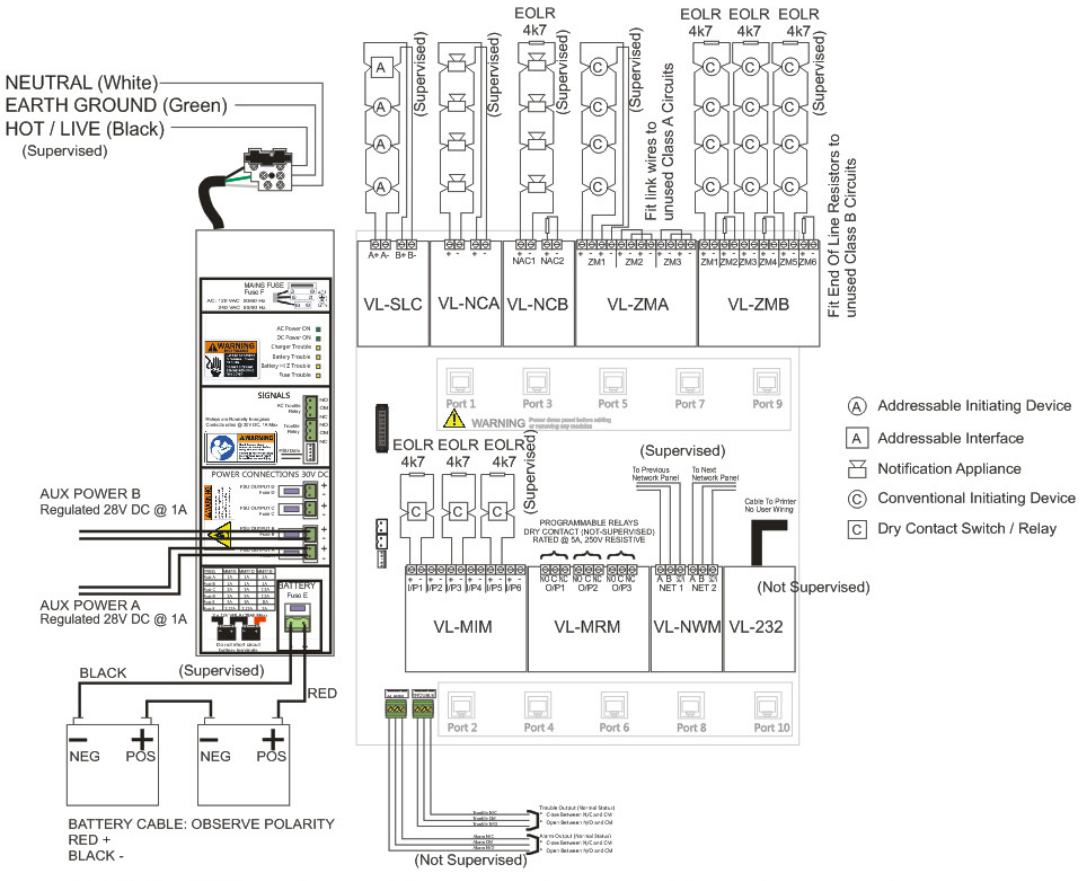

NOTE: The MMP panel is a modular system, where any module can be connected to any expansion port. The above diagram gives an example configuration for illustrative purposes.

VL-NCA Field Wiring Connections

Typical Wiring Diagram (Class A) - Synchronized Velocity NAC Devices

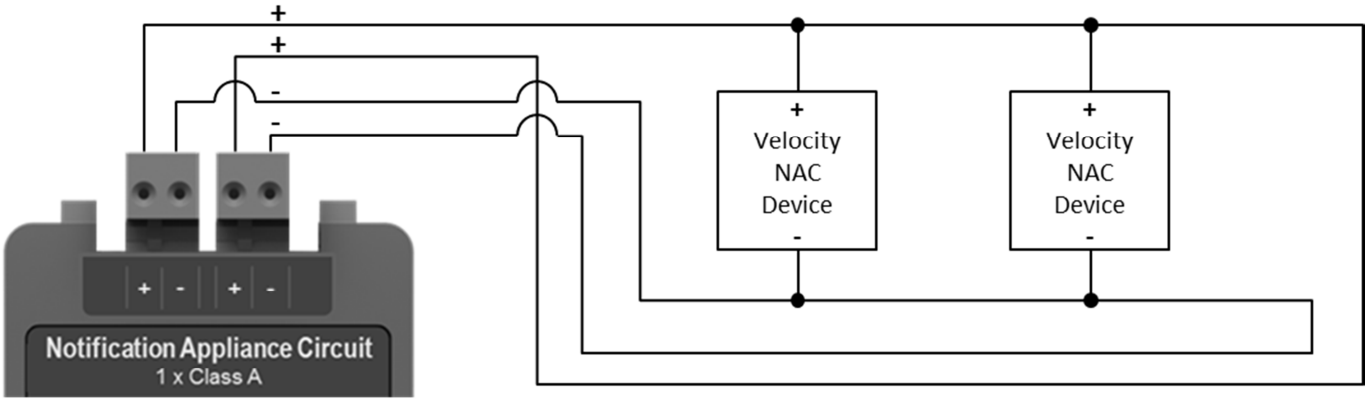

(VL-NCA)
(Configured for synchronized Velocity NAC devices)

(Supervised)
(Synchronized)
(Power Limited)

Typical Wiring Diagram (Class A) - Unsynchronized Bell Devices

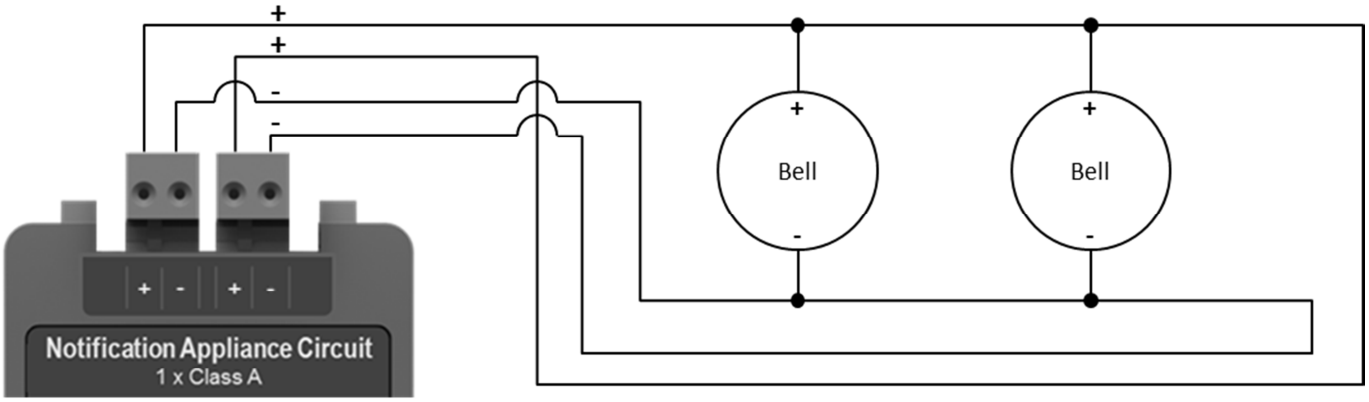

(VL-NCA)
(Configured for unsynchronized bell devices)

(Supervised)
(Unsynchronized)
(Power Limited)

NOTE: *When an NAC is configured as a bell output, the "24V On" LED on the front of the module will be flashing ON/OFF.*

Typical Wiring Diagram (Auxiliary 24VDC)

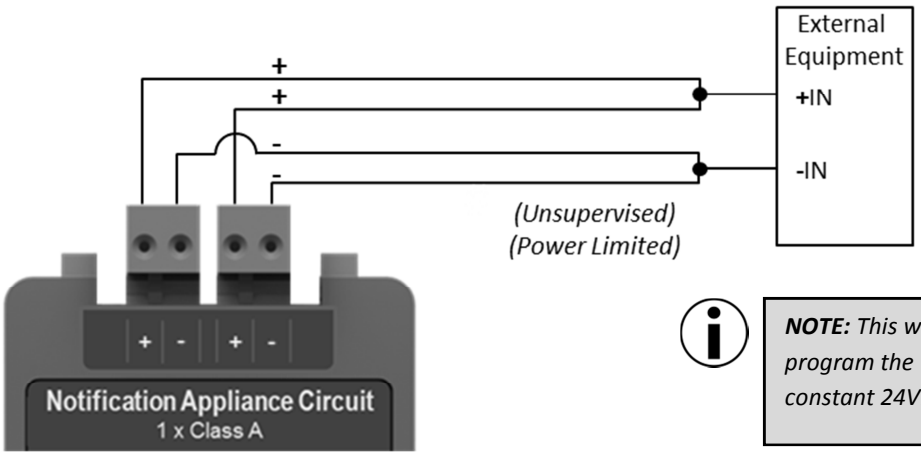

(Unsupervised)
(Power Limited)

(VL-NCA)
(Configured as a 24v Auxiliary Output)

NOTE: *This wiring diagram demonstrates the option to program the VL-NCA output to become a regulated constant 24VDC output.*

NOTE: *When an NAC is configured as a 24v aux output, the "24V On" LED on the front of the module will be ON.*

VL-NCB Field Wiring Connections

Typical Wiring Diagram (Class B) - Synchronized Velocity NAC Devices

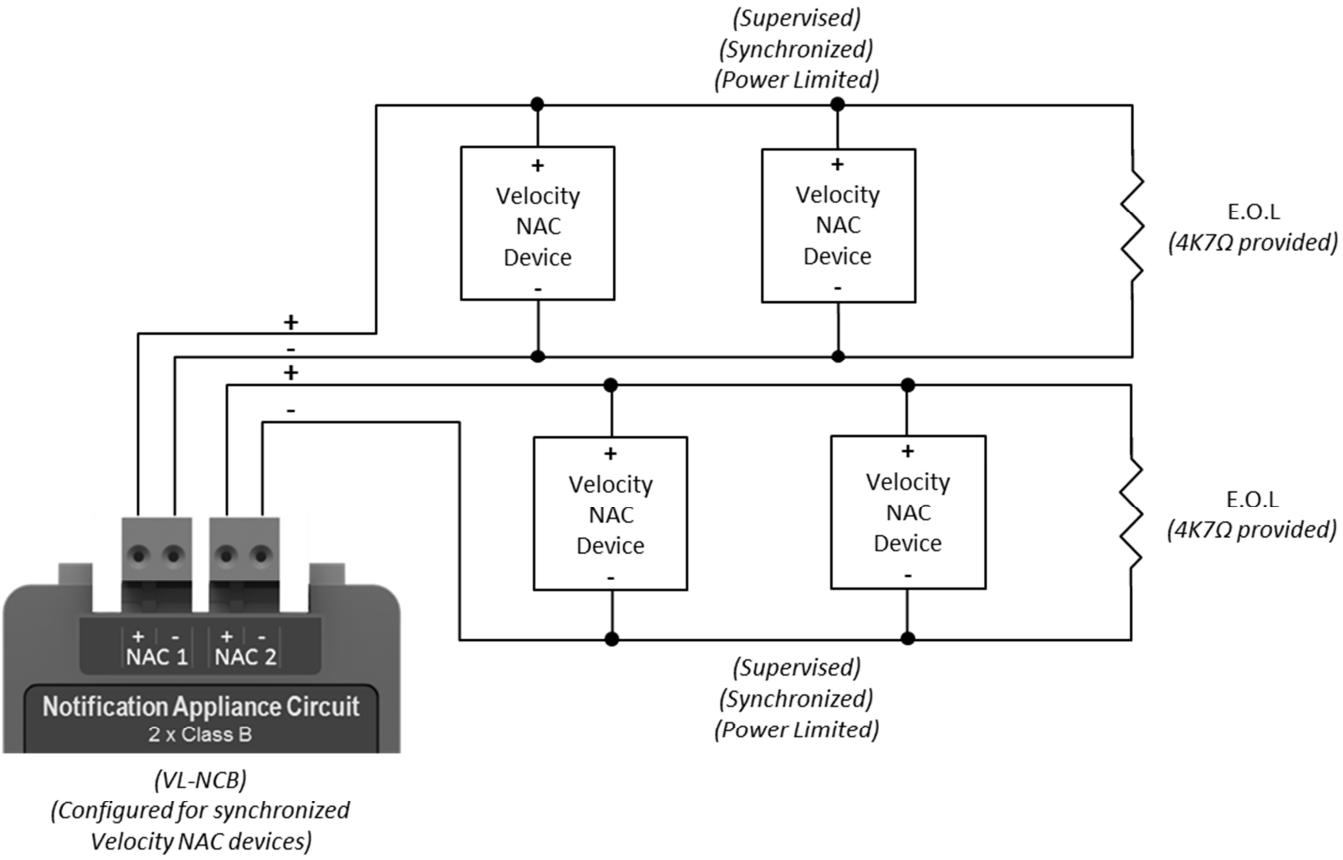

Typical Wiring Diagram (Class B) - Unsynchronized Bell Devices

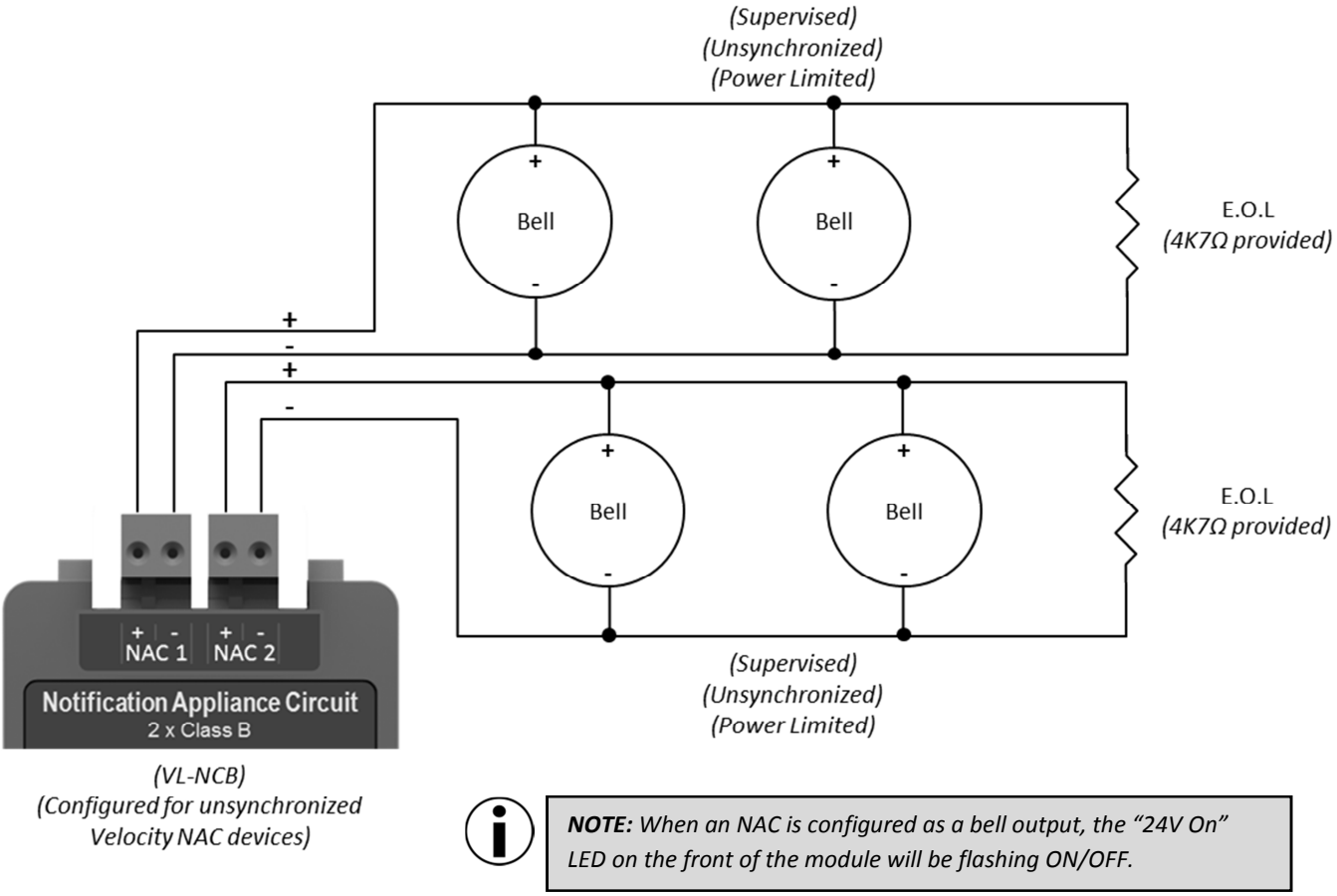

NOTE: *When an NAC is configured as a bell output, the "24V On" LED on the front of the module will be flashing ON/OFF.*

Typical Wiring Diagram (Auxiliary 24VDC)

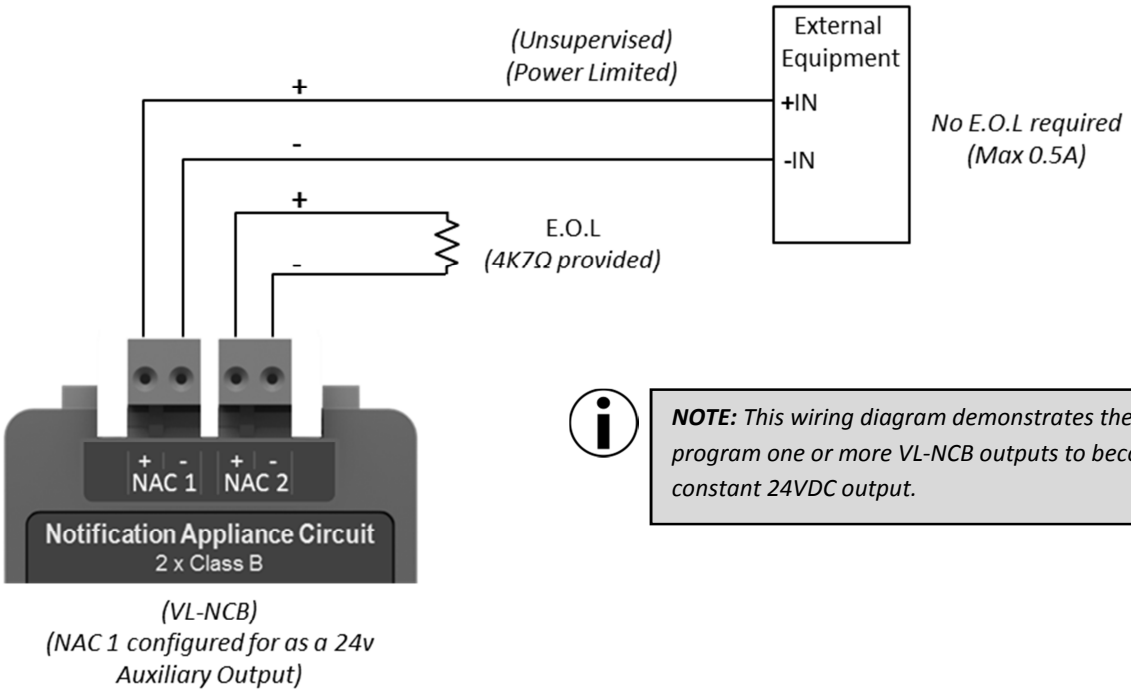

(VL-NCB)
(NAC 1 configured for as a 24v Auxiliary Output)

NOTE: *This wiring diagram demonstrates the option to program one or more VL-NCB outputs to become a regulated constant 24VDC output.*

NOTE: *When an NAC is configured as a 24v aux output, the "24V On" LED on the front of the module will be ON.*

Wiring recommendations for Notification Appliance Circuits *(VL-NCA & VL-NCB)*

The VL-NCA circuit is rated for 1A each. The VL-NCB circuits are rated for 500mA each. The table shows the maximum wire run in metres for different wire gages and alarm loads.

Wire Gauge	125mA Load	250mA Load	500mA Load	1000mA Load
18 AWG	765 m	510 m	340 m	227 m
16 AWG	1530 m	1020 m	680 m	340 m
14 AWG	1869 m	1246 m	831 m	554 m

RECOMMENDED CABLE:
Cable should be UL listed FPL, FPLR, FPLP or equivalent.

VL-NCA & VL-NCB Specifications

Notification Appliance Circuit Modules (VL-NCA)	
Circuit Voltage	29VDC Nominal (19V – 29V)
Circuit Type	Regulated 24V DC. Power limited & Supervised.
Wiring Class	Class A
Maximum NAC Current	1A
Maximum RMS current for a single notification appliance	700mA
Maximum Line Impedance	4Ω
Wiring Class	1 x Class A (VL-NCA) [Power limited & Supervised]
End of Line Resistor	N/A
Recommended cable sizes	18 AWG to 14 AWG (0.8mm^2 to 2.5mm^2)
Synchronisation	Selectable at each module as :- Sounder (Uses synchronisation protocol for horn strobes) or Bell (Will pulse the output voltage to give the required temporal pattern)
Special Applications	24V auxiliary voltage output
Notification Appliance Circuit Modules (VL-NCB)	
Circuit Voltage	29VDC Nominal (19V – 29V)
Circuit Type	Regulated 24V DC. Power limited & Supervised.
Wiring Class	Class B

Maximum Current	2 x 500mA
Maximum RMS current for a single notification appliance	350mA
Maximum Line Impedance	4Ω
Wiring Class	2 x Class B (VL-NCB) [Power limited & Supervised]
End of Line Resistor	4K7Ω
Recommended cable sizes	18 AWG to 14 AWG (0.8mm^2 to 2.5mm^2)
Synchronisation	Selectable at each module as Sounder (Uses synchronisation protocol for horn strobes) or Bell (Will pulse the output voltage to give the required temporal pattern)
Special Applications	24V auxiliary voltage output

Compatible Notification Devices

NAC Devices	
Velocity Wall Mount Chime (White)	VL-W-C-W
Velocity Wall Mount Chime (Red)	VL-W-C-R
Velocity Wall Mount Multitone (White)	VL-W-M-W
Velocity Wall Mount Multitone (Red)	VL-W-M-R
Velocity Wall Mount Chime/Strobe (White)	VL-W-CS-W
Velocity Wall Mount Chime/Strobe (Red)	VL-W-CS-R
Velocity Wall Mount Multitone/Strobe (White)	VL-W-MS-W
Velocity Wall Mount Multitone/Strobe (Red)	VL-W-MS-R
Velocity Ceiling Mount Chime/Strobe (White)	VL-C-CS-W
Velocity Ceiling Mount Chime/Strobe (Red)	VL-C-CS-R
Velocity Ceiling Mount Multitone/Strobe (White)	VL-C-MS-W
Velocity Ceiling Mount Multitone/Strobe (Red)	VL-C-MS-R
Velocity Mini Horn (White)	VL-MH-W
Velocity Mini Horn (Red)	VL-MH-R
Velocity Wall Mount Strobe (White)	VL-W-S-W
Velocity Wall Mount Strobe (Red)	VL-W-S-R
Velocity Ceiling Mount Strobe (White)	VL-C-S-W
Velocity Ceiling Mount Strobe (Red)	VL-C-S-R
Wall Mount Bell 6”	GB6-24
Wall Mount Bell 10”	GB10-24

Maximum Notification Devices per Circuit

Some of the above notification devices have selectable settings for horn and strobe output. The table below gives an indication of the number of devices that can be connected to a NAC under different settings.

VL-NCB – Class B

Sound Setting	No Strobe	15 Candela	30 Candela	75 Candela	110 Candela
Chime	9	3	2	1	1
Multitone (low)	9	2	2	1	1
Multitone (High)	9	2	2	1	1
Mini Horn	9	-	-	-	-

VL-NCB – Class A

Sound Setting	No Strobe	15 Candela	30 Candela	75 Candela	110 Candela
Chime	18	7	5	3	2
Multitone (low)	18	5	4	2	2
Multitone (High)	18	5	4	2	2
Mini Horn	18	-	-	-	-

VL-MIM Field Wiring Connections

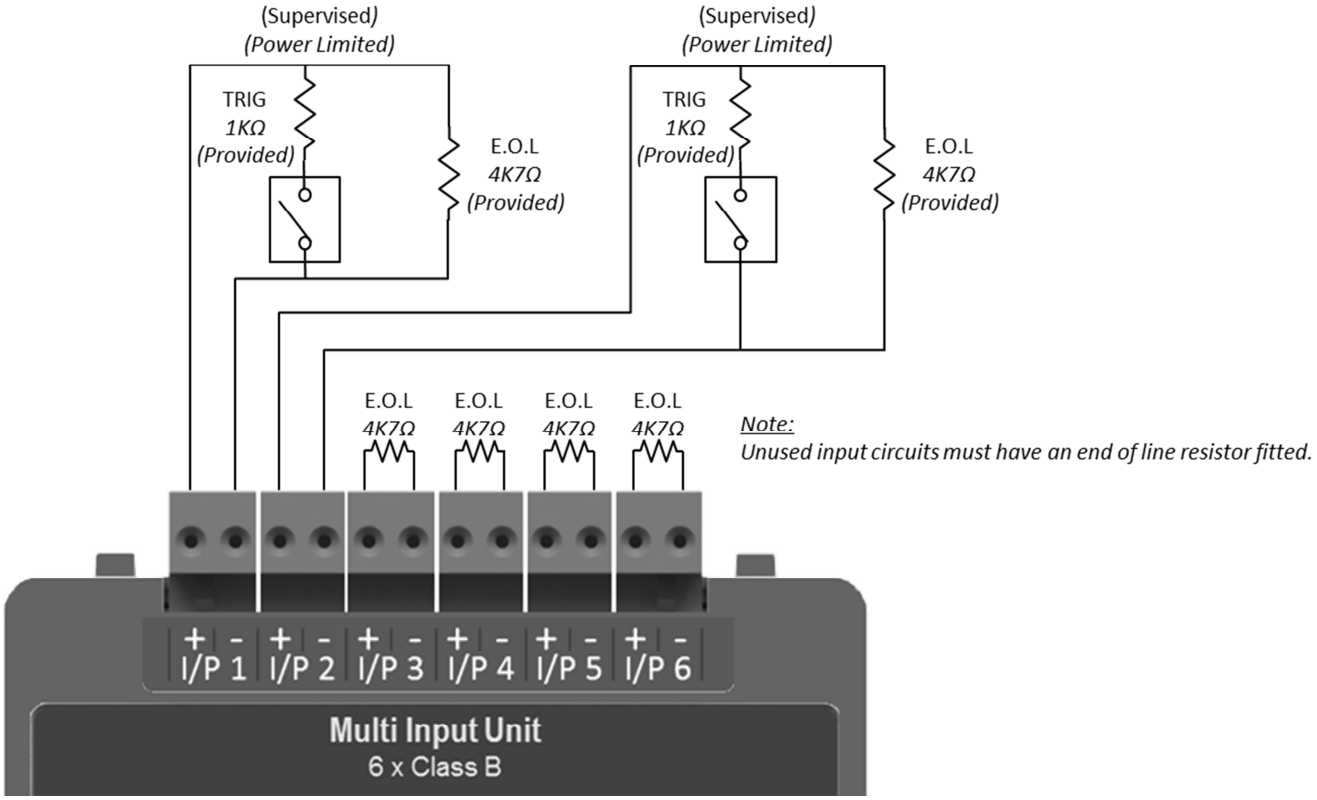

Wiring Recommendations for Initiating Device Circuits *(VL-MIM)*

Wire Gauge (AWG)	Maximum Wiring Run (Metres)
22	910
20	1450
18	2300

RECOMMENDED CABLE:
Cable should be UL listed FPL, FPLR, FPLP or equivalent.

VL-MIM Specifications

Input Module (VL-MIM)	
Circuit Voltage	24VDC Nominal (16V – 24.5V with EOL fitted)
Wiring Class	6 x Class B circuits
Input Maximum Line Impedance	10Ω
End of Line Resistor	4K7Ω
Recommended cable sizes	22 AWG to 18 AWG (0.3mm^2 to 0.8mm^2)
Alarm Trigger Resistor	1KΩ

VL-MRM Field Wiring Connections

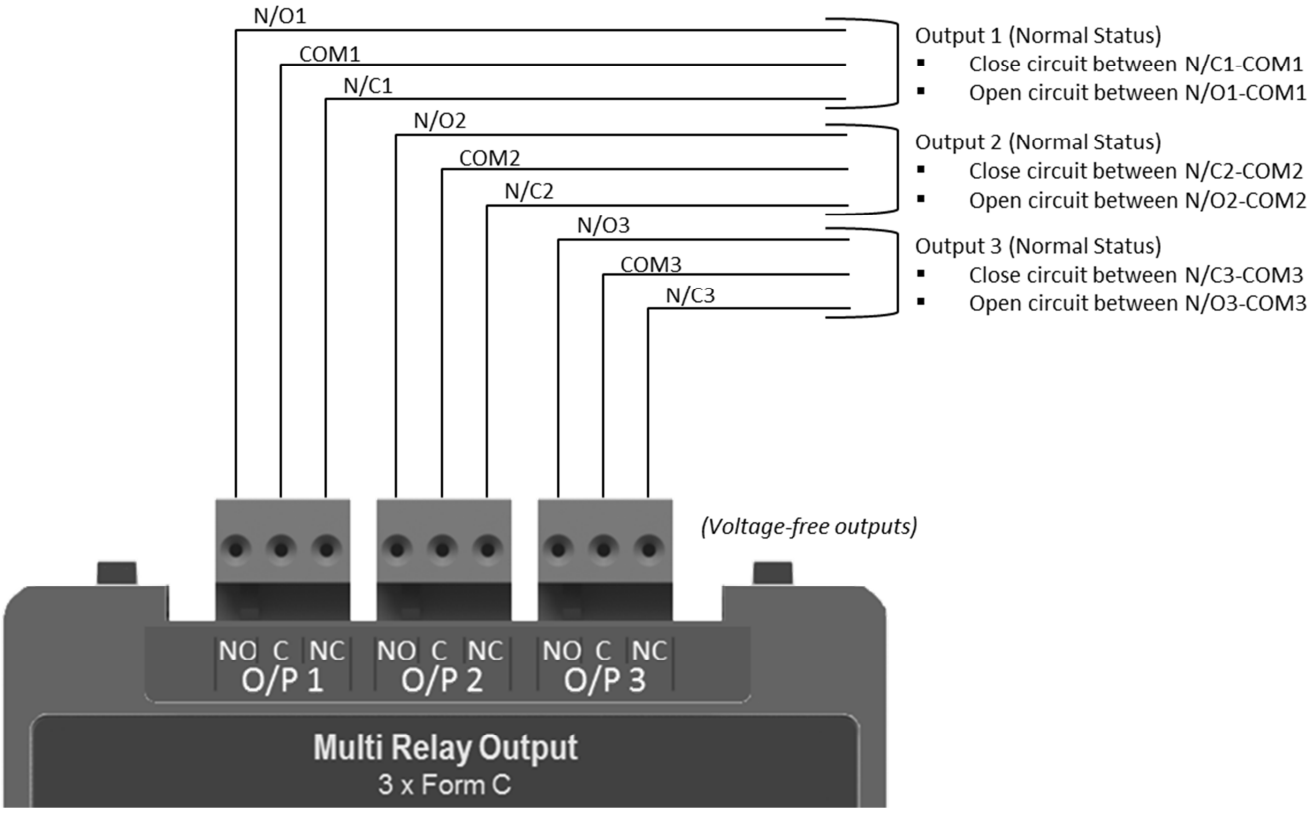

NOTE: *When an MRM relay is configured as an alarm output, it will act as a common alarm relay, and cannot be controlled by cause and effect.*

VL-MRM Specifications

Multi Relay Modules (VL-MRM)	
Contact Form	3 x Form C
Switching Capacity	5 A, 30VDC (resistive) 5 A, 250VAC (general use)
Circuit Type	Power limited & Not Supervised.
Modes	Common alarm, Common trouble, Common supervisory or Programmable
Recommended cable sizes	18 AWG to 14 AWG (0.8mm^2 to 2.5mm^2)

VL-ZMA Field Wiring Connections

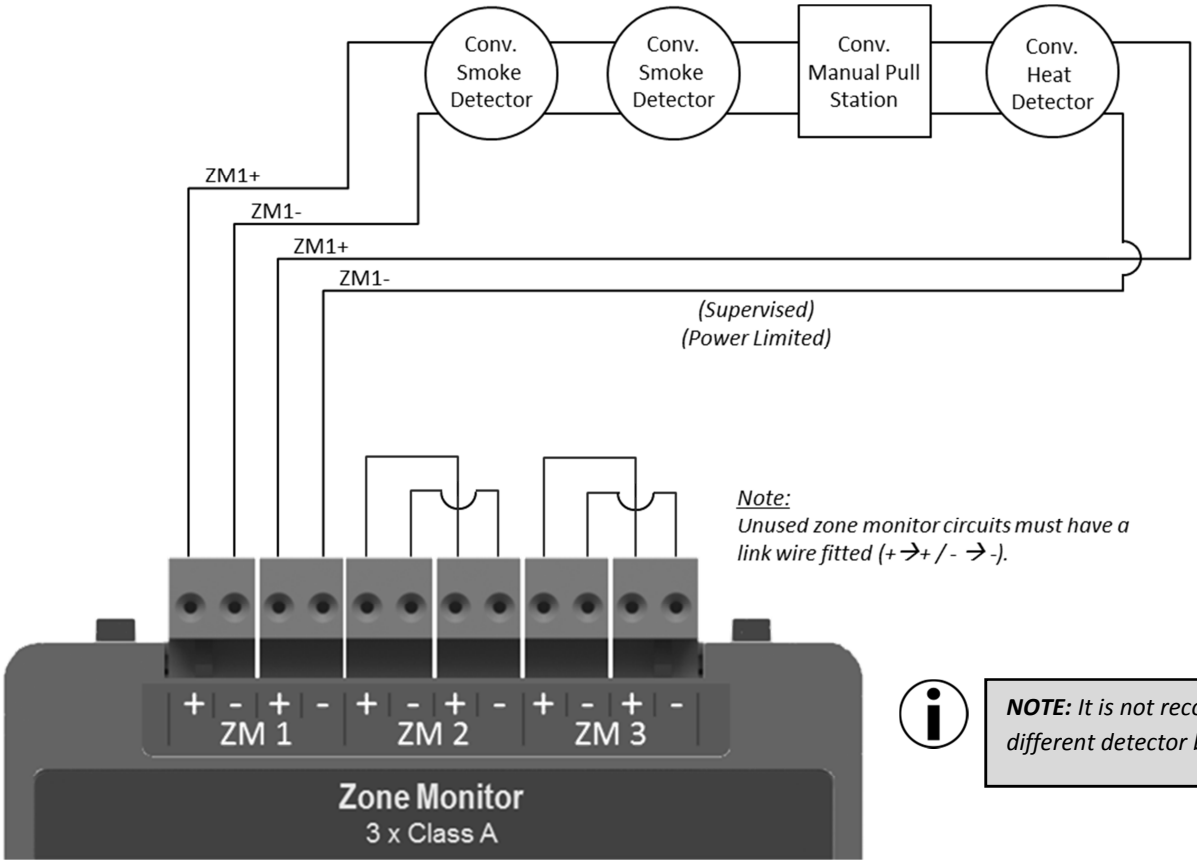

NOTE: *It is not recommended to mix different detector brands on a zone.*

VL-ZMB Field Wiring Connections

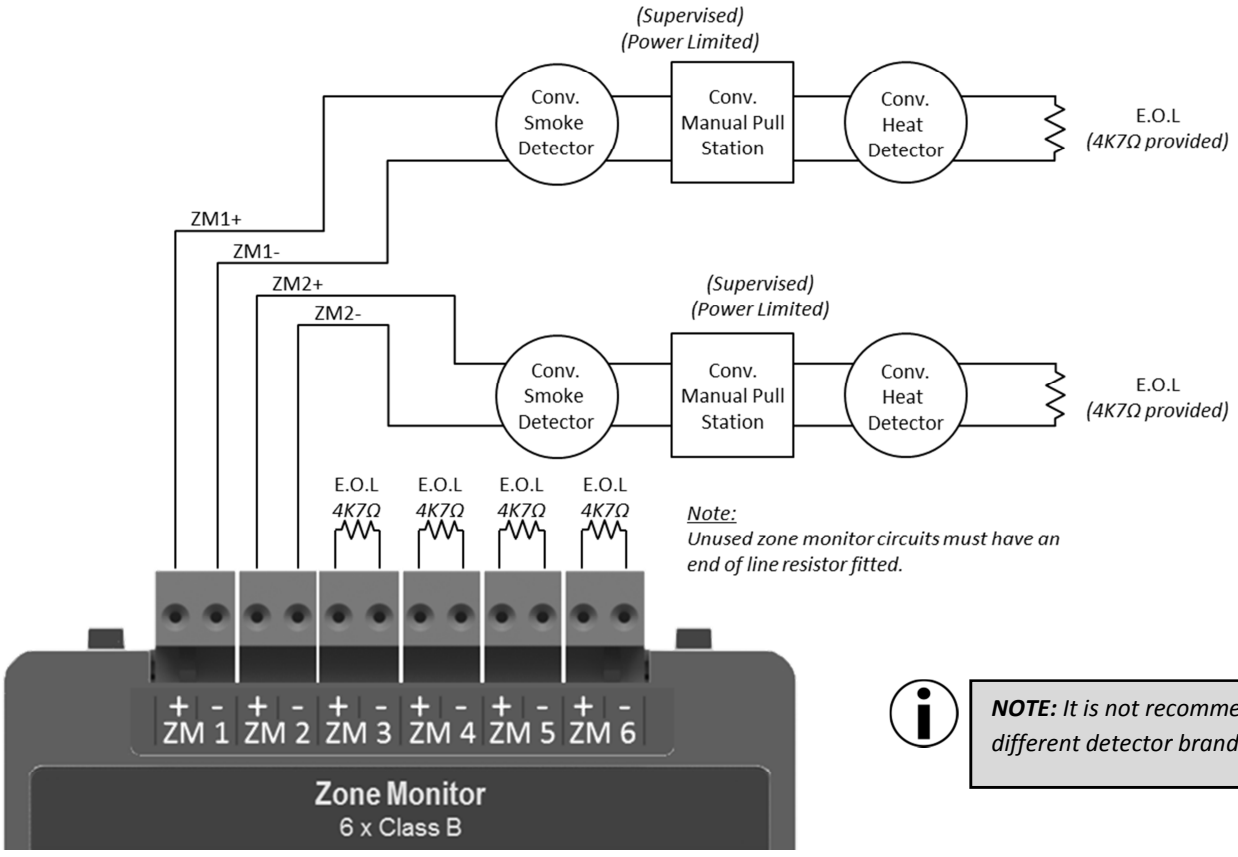

NOTE: *It is not recommended to mix different detector brands on a zone.*

Wiring Recommendations for Initiating Device Circuits *(VL-ZMA & VL-ZMB)*

Wire Gauge (AWG)	Maximum Wiring Run (Metres)
22	910
20	1450
18	2300



RECOMMENDED CABLE:

Cable should be UL listed FPL, FPLR, FPLP or equivalent.

While Velocity conventional Zone modules can support cable runs greater than 2000m, it is generally better to plan the system to use more manageable lengths

VL-ZMA & VL-ZMB Specifications

Zone Monitor Modules (VL-ZMA)	
Circuit Voltage	29VDC Nominal (19.5 – 30V)
Circuit Type	Power limited & Supervised
Wiring Class	Class A
Zone Maximum Line Impedance	10Ω
Zone Maximum Current (under S/C conditions)	56mA
Wiring Class	3 x Class A
Recommended cable sizes	22 AWG to 14 AWG (0.3mm^2 to 2.5mm^2)
End of Line Resistor	N/A
Alarm Trigger Resistor	1KΩ
Compatible Devices	Nittan EVCA-P (UL268 Listed)
Maximum Detectors Per Zone	20
Zone Monitor Modules (VL-ZMB)	
Circuit Voltage	26VDC Nominal (17.5V - 26.5V with EOL connected)
Circuit Type	Power limited & Supervised
Wiring Class	Class B
Zone Maximum Line Impedance	10Ω
Zone Maximum Current (under S/C conditions)	56mA
Wiring Class	6 x Class B circuits
Recommended cable sizes	22 AWG to 14 AWG (0.3mm^2 to 2.5mm^2)
End of Line Resistor	4K7Ω
Alarm Trigger Resistor	1KΩ
Compatible Devices	Nittan EVCA-P (UL268 Listed)
Maximum Detectors Per Zone	20

VL-NWM Field Wiring Connections

Ring Topology

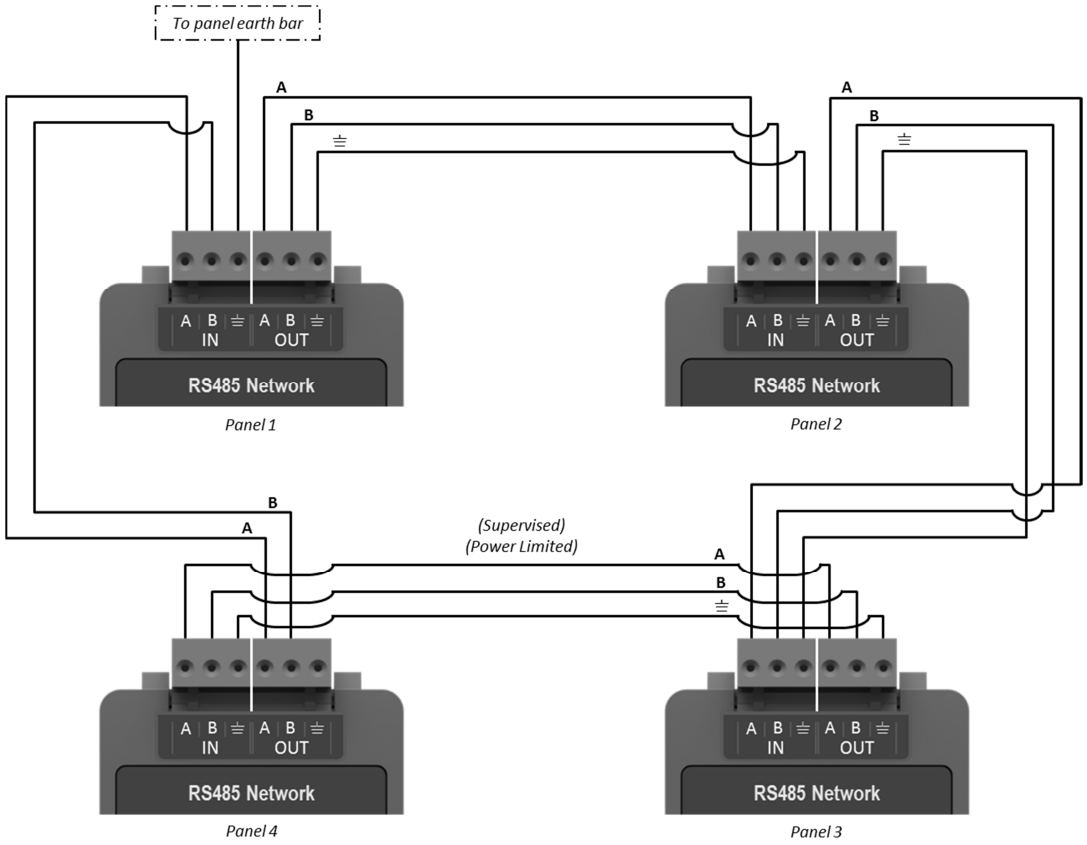

NOTE: *It is recommended to install the network in a ring topology for protection against open circuit and short circuit faults.*

Bus Topology

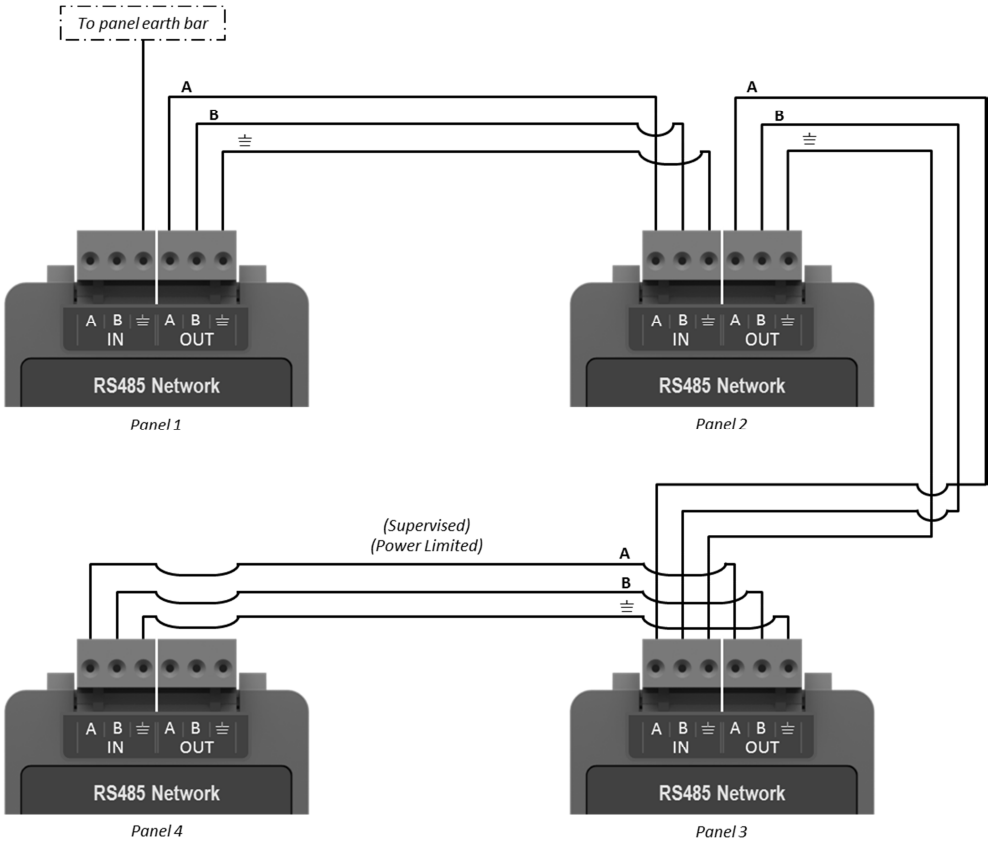

Wiring Recommendations for Network Wiring *(VL-NWM)*

The Velocity network can support up to 64 panels.



RECOMMENDED CABLE: *Belden type UL*

VL-NWM Specifications

Network Module (VL-NWM)	
Maximum Network Size	64 Nodes
Maximum Distance Between Nodes	1km (with screened data cable)
Communication Protocol	RS485
Network Wiring Typologies	Bus or Ring

VL-SLC Field Wiring Connections

Class X Wiring

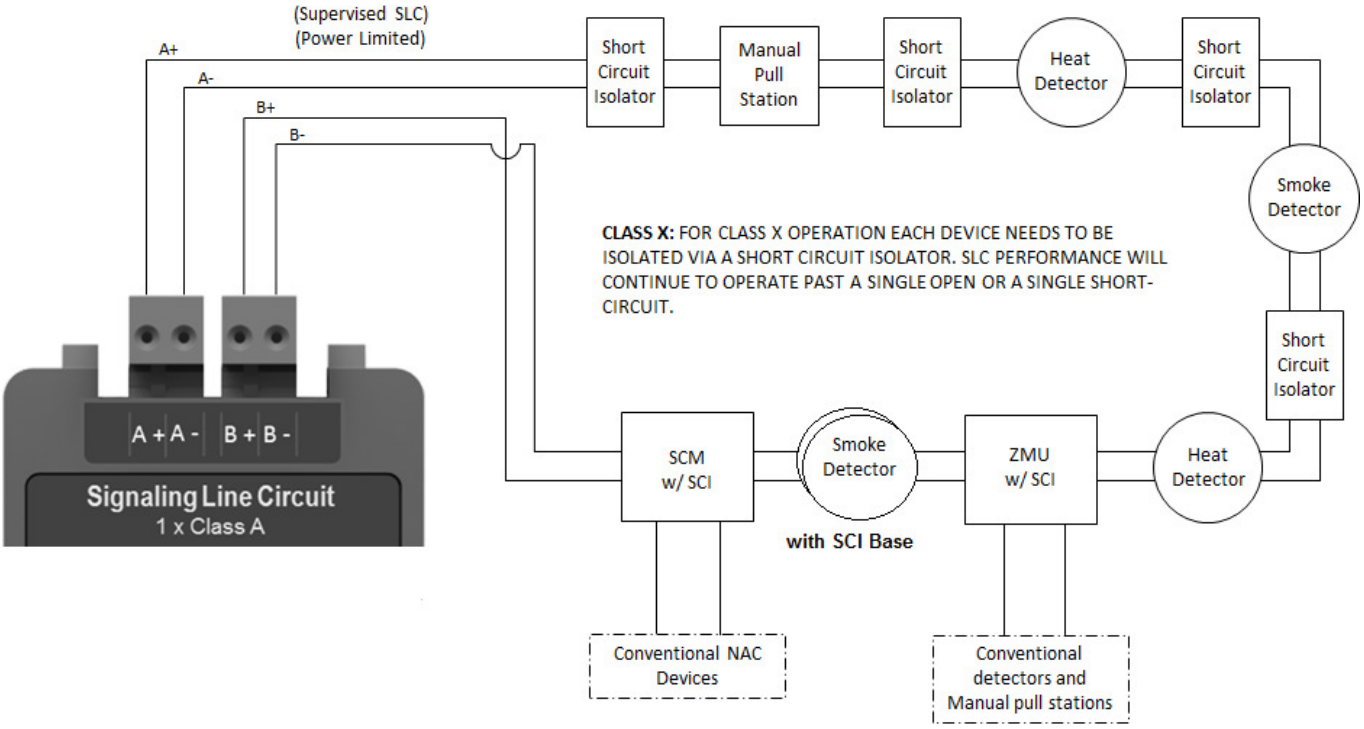

Note: *Detectors can be fitted to isolator bases, or fitted between isolator modules for Class X wiring. Manual stations should be fitted between isolator modules.*

Class A Wiring

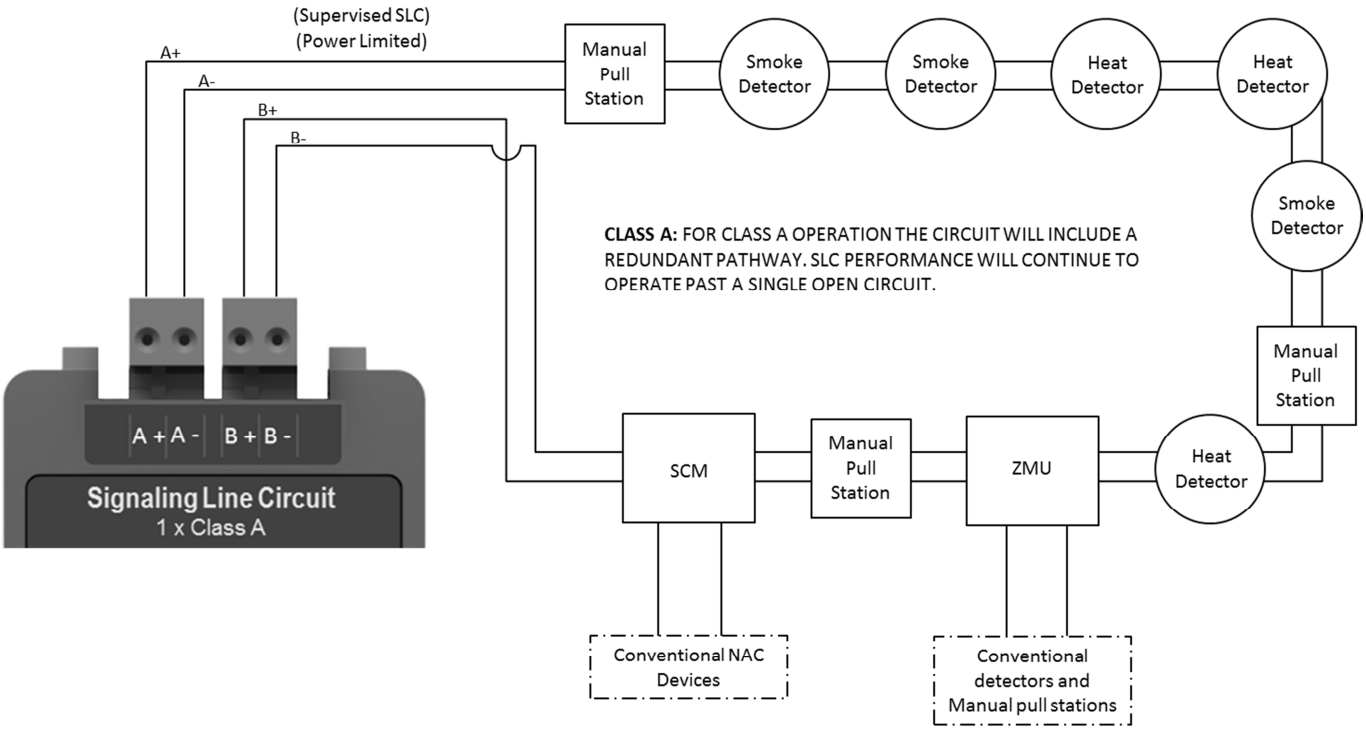

Note: *If an SLC using Class A wiring is used for 2 or more detection zones, short circuit isolators, or devices with built in short circuit isolators (such as interfaces) should be fitted to the zone boundaries to prevent a single short circuit affecting more than one zone.*

Wiring Recommendations for Signalling Line Circuits *(VL-SLC)*

The VL-SLC's are rated for 500mA each, but in a typical UL installation (with no NAC devices powered from the loop, maximum quiescent current will be less than 60mA.

Wire Gauge (AWG)	Maximum Wiring Run (Metres)
18	861
16	1290
14	2000

NOTE:
- *Line capacitance shall not exceed 0.1µf (100nF)*
- *Inductance shall not exceed 1mH*
- *Resistance shall not exceed 50 Ohms.*

RECOMMENDED CABLE: *Twisted pair cable. Shield of cable should be terminated to the earth bar in the panel.*

SLC Device Wiring and Device Information

SLC device configuration for addressable devices

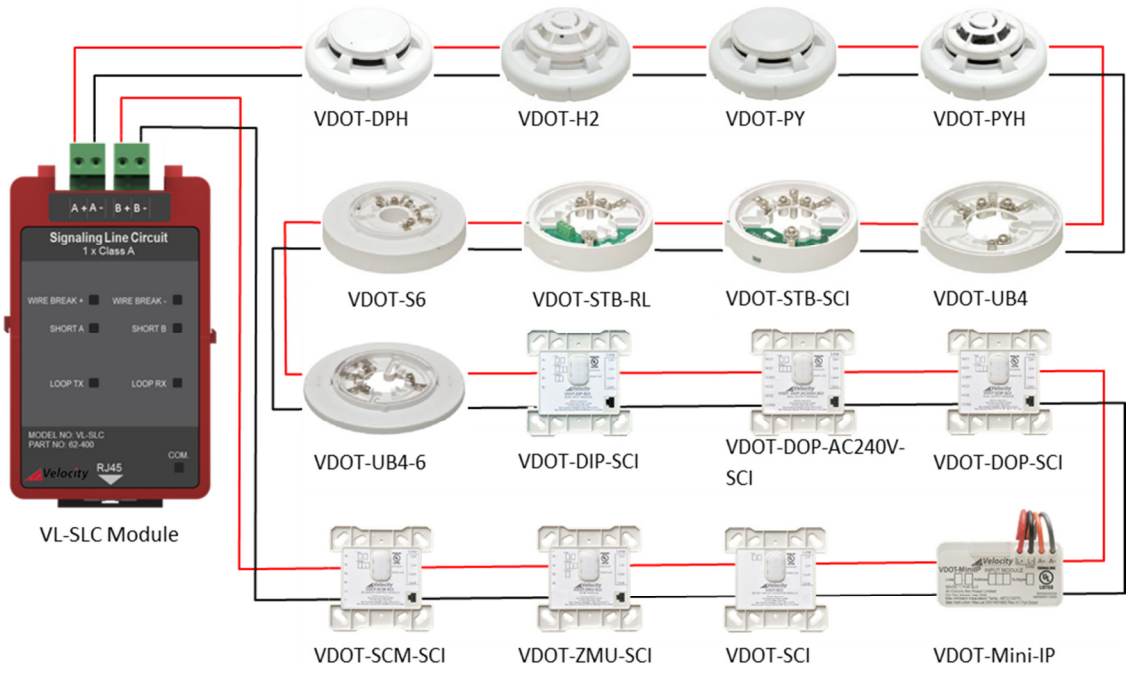

VDOT-DPH	
	***VDOT-DPH*** - An attractively-styled, low profile combined dual optic photoelectric smoke and heat detector for use with the Velocity series of Fire Alarm Control panels. The VDOT-DPH Dual Optical Detector goes one step further and uses both IR and blue LEDs to provide a more accurate measurement of particles within the chamber.
VDOT-H2 and VDOT-H2-H	
	***VDOT-H2 and VDOT-H2-H*** - Low profile, analogue addressable, heat detector. This analogue addressable heat detector has a specific detector address to provide exact detector locations throughout the installation. This allows for constant monitoring of the detector sensitivity and reports the detector's condition to the fire alarm control panel. The VDOT-H2 is a 8.3 °C (15 °F) rate-of-rise temperature heat detector with 57 °C (135 °F) fixed temperature alarm. The VDOT-H2-H is a high temperature heat detector with 83 °C (181 °F) fixed temperature alarm.

VDOT-PY



VDOT-PY - An attractively-styled, low profile, analogue addressable, photoelectric smoke detector for use with the Velocity series of Fire Alarm Control panels. The smoke sensitivity of the detector can be programmed using the control panel software to suit the environmental conditions. The detector status is continually monitored and reported to the panel and automatic compensation corrects the sensitivity for contamination build up with time.

VDOT-PYH



VDOT-PYH - An attractively-styled, low profile, analogue addressable, combined photoelectric smoke and heat detector for use with the Velocity series of Fire Alarm Control panels. The smoke sensitivity of the detector can be programmed using the control panel software to suit the environmental conditions. The detector status is continually monitored and reported to the panel and automatic compensation corrects the sensitivity for contamination build up with time.

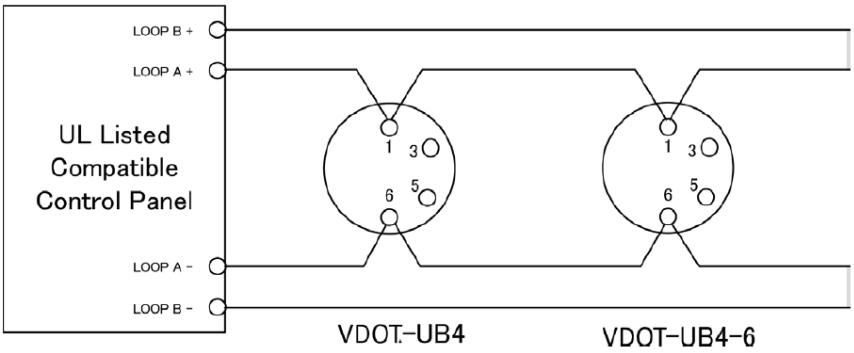

Addressable device – Wiring diagram

VDOT-UB4



VDOT-UB4-6



VDOT-UB4 series base is detector base which is designed to be used with the model ***VDOT-PY, VDOT-PYH, VDOT-DPH, VDOT-H2,*** and ***VDOT-H2-H*** detector series heads. The series includes VDOT-UB4, which is 4 inch standard base, and VDOT-UB4-6, which is 6 inch standard base.

The terminals of the base are used depending on the detector heads.

- 12 –20AWG field wire can be connected to the terminals.
- VDOT-UB4 is mounted to a 3-1/2”octagonal electrical box.
- VDOT-UB4-6 is mounted to a 3-1/2” and 4” octagonal electrical box, or4” square electrical box.VDOT-UB4-6 can be also used to cover larger opening around an electrical box.

VDOT-UB4 / VDOT-UB4-6 are supplied with 4 terminals as standard. The Terminals of the bases are configured as follows.

- 1 – SLC Positive
- 3 – Not Used
- 5 – Not Used
- 6 – SLC negative

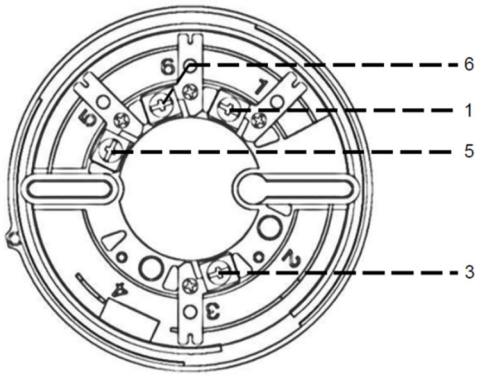

Figure1 Position of terminals (EVA-

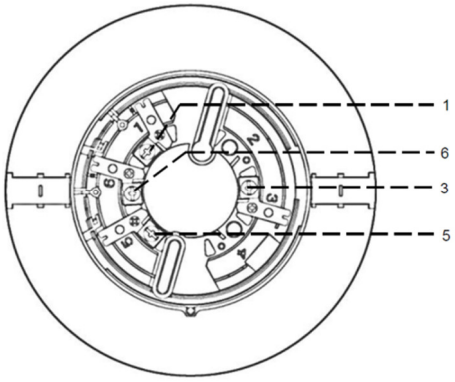

Figure2 Position of terminals (EVA-

VDOT-DIP-SCI



VDOT-DIP-SCI - Dual Input Module with Short Circuit Isolator is intended for use in addressable two wire systems. The module monitors and transmits the status (normal, open, short, or active) of devices equipped with NC/NO dry contacts to a control panel. The initiating device circuit (IDC) can be wired on Class A (Style D & E) or Class B (Style B & C).

Note: Any conventional detector cannot be connected with the module.

EOL (10k ohm) is connected between A+ (B+) and A- (B-) in VDOT-DIP-SCI.

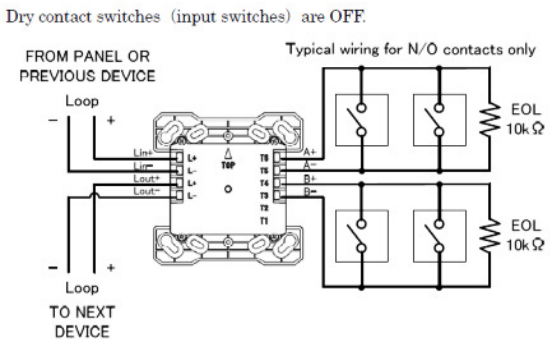

VDOT-DIP-SCI

FIRERAY 50RU/100RU

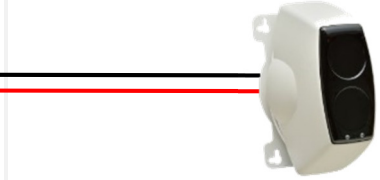

FIRERAY 50RU/100RU - The system comprises of a single unit incorporating an infra-red transmitter and receiver. The signal generated in the transmitter element and reflected by the prism back to the receiver element is analysed for the presence of smoke. The internal microprocessor determines an alarm condition when a predetermined level is reached.

For connection of a single conventional Detector to a zone:

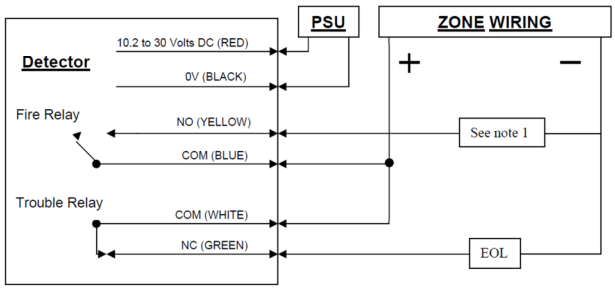

FIRERAY 50RU/100RU

VDOT-DOP-AC240V-SCI



VDOT-DOP-AC240V-SCI - Dual Output Module with Short Circuit Isolator is an addressable dual output module that provides two dry contacts. The contact rating is 4.8A at AC250V. The status of each dry contact is controlled by a control panel.

Operation:

- Normal Standby condition: The module receives polling from the control panel at the regular interval. Polling LED (green) flashes.
- Active condition: When receiving a control signal from the control panel, the relay output is activated, and Output LED (red) illuminates.

- Trouble condition: If an overcurrent occurs because SLC (Signalling Line Circuit) is shorted, SCI LED (yellow) illuminates, and the module communicates to the control panel the short status.

SCI (Short Circuit Isolator) Function:
The module has a built-in short circuit isolator. SCI circuit prevents entire loop failure in the event of a short between L+ and L-on the loop. If a short is detected between L+ and L-, the yellow LED is illuminated. The line between Lin- and Lout- is disconnected automatically to isolate the short circuit, and short circuit status is communicated to the control panel. Upon removal of the short condition, the module will automatically connect between Lin-and Lout- to restores the entire loop to the normal stand by status.

VDOT-DOP-AC240V-SCI

Wiring

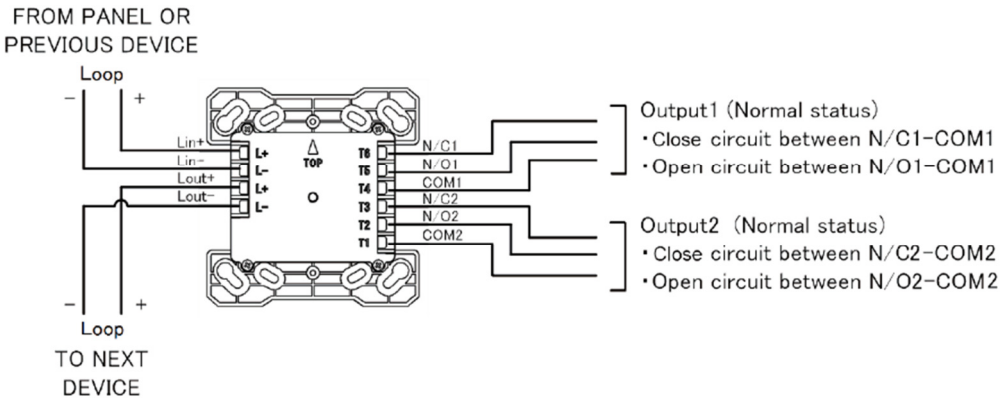

Relay Module contains two isolated sets of Form-C contacts, which operate as a DPDT switch. The module allows the control panel to switch these contacts on command. No supervision is provided for the relay contacts.

VDOT-DOP-SCI



VDOT-DOP-SCI - Dual Output Module with Short Circuit Isolator is an addressable dual output module that provides two dry contacts. The contact rating is 2A at DC30V. The status of each dry contact is monitored and controlled by a control panel.

Operation:

- Normal standby condition: The module receives polling from the control panel at the regular interval. Polling LED (green) flashes.
- Active condition: When receiving a control signal from the control panel, the relay output is activated, and Output LED (red) illuminates.
- Trouble condition: If an overcurrent occurs because SLC (Signalling Line Circuit) is shorted, SCI LED (yellow) illuminates, and the module communicates to the control panel the short status.

SCI (Short Circuit Isolator) Function:
The module has a built-in short circuit isolator. SCI circuit prevents entire loop failure in the event of a short between L+ and L-on the loop. If a short is detected between L+ and L-, the yellow LED is illuminated. The line between Lin- and Lout- is disconnected automatically to isolate the short circuit, and short circuit status is communicated to the control panel. Upon removal of the short condition, the module will automatically connect between Lin-and Lout- to restores the entire loop to the normal operating status.

VDOT-DOP-SCI

Wiring

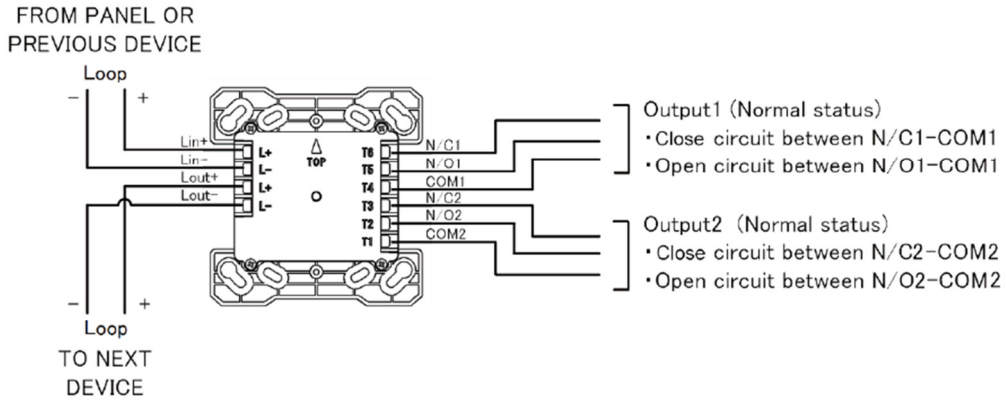

Relay Module contains two isolated sets of Form-C contacts, which operate as a DPDT switch. The module allows the control panel to switch these contacts on command. No supervision is provided for the relay contacts.

VDOT-ZMU-SCI (Part code: TBC)	VDOT-P + VDOT-UB4 base
	
VDOT-ZMU-SCI – Zone module with short circuit Isolator for addressable two wire systems, which can be connected with (2) wire conventional detectors. The module monitors and transmits the status (Normal, Open, Short, or Alarm) of zone with the detectors to a control panel. The initiating device circuit (IDC) can be wired on Class A or Class B.	***VDOT-P*** - Low profile photoelectric smoke detector for use in conventional fire detection systems. This detector is also for use in analogue fire alarm systems, when the detector is connected to the analogue addressable module VDOT-ZMU-SCI Zone Module.

Class B (Style B/C)

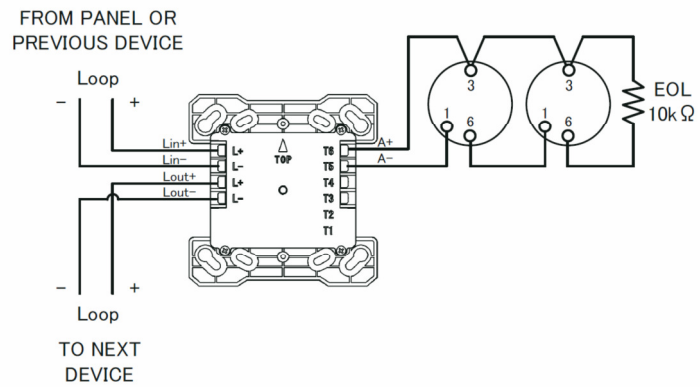

Class B (Style D/E)

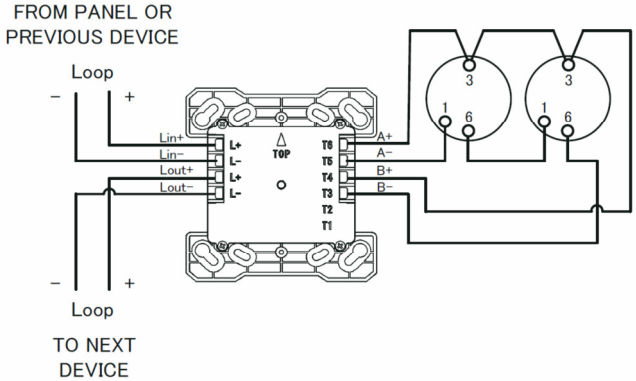

VDOT-SCM-SCI



VDOT-SCM-SCI Sounder Control Module with Short Circuit Isolator is an output module intended for use in addressable two wire systems, which provides the control of NAC (Notification Appliance Circuit) devices. The Notification Appliance Circuit can be wired on Class A (Style Z) and Class B (Style Y).

OPERATION:

- Normal standby condition: The module receives polling from a control panel at the regular interval. Polling LED (green) flashes.
- Active condition: When receiving a control signal from the control panel, the module operates NAC devices, and Output LED (red) illuminates.
- Trouble condition: If an overcurrent occurs because SLC (Signaling Line Circuit) is shorted, SCI LED (yellow) illuminates, and the module communicates to the control panel the short status. The module also communicates to the control panel the open/short status of NAC.

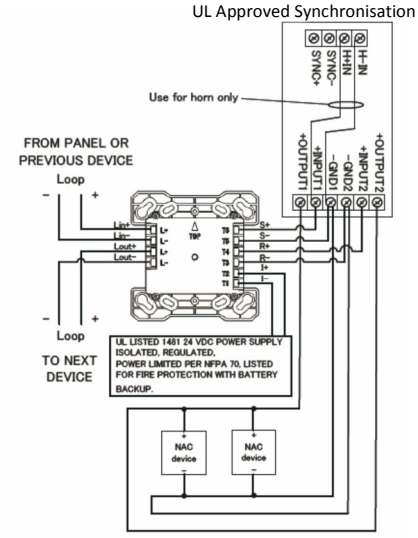

VDOT-SCM-SCI Style Z

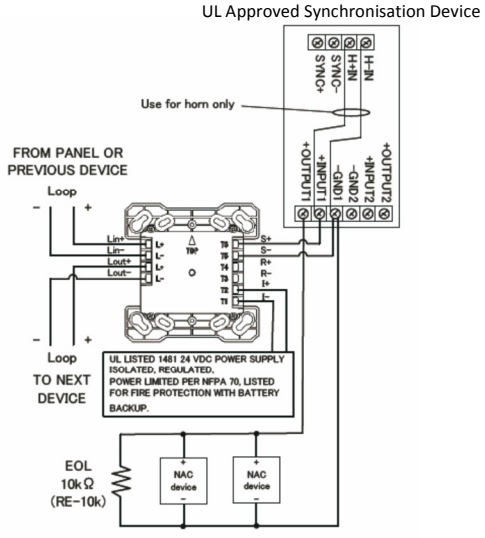

VDOT-SCM-SCI Style Y

VDOT-SCI



VDOT-SCI Short Circuit Isolator Module is a short circuit isolator module that prevents an entire loop failure in the event of a short in the loop. If a short is detected the yellow LED indicator illuminates, and short - circuited area is isolated automatically. Upon removal of the short condition, the module automatically connects the area to restore the entire loop to the normal operating status. The module is not addressable.

OPERATION:

- Normal standby condition: The module monitors the voltage at the SLC (Signaling Line Circuit).
- Short condition: If an overcurrent occurs because SLC is shorted, SCI LED (yellow) illuminates, and the short circuit is isolated.

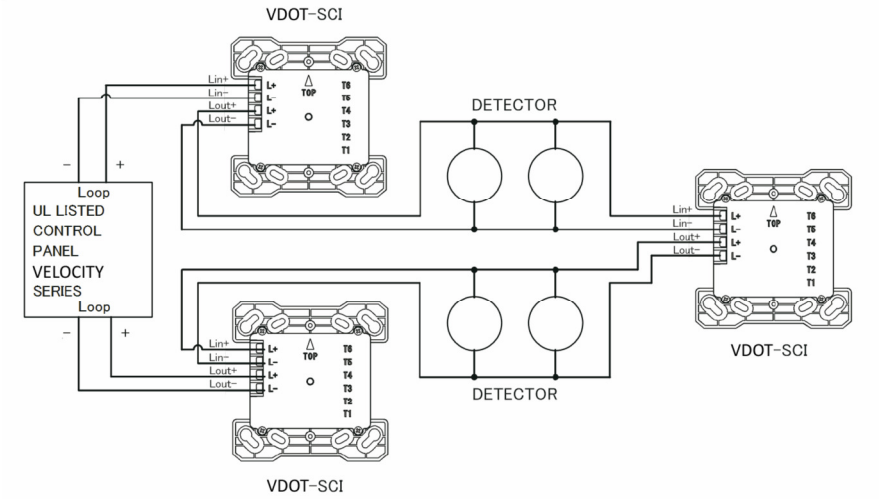

VDOT-SCI Wiring

VL-SLC Specifications

Signalling Line Circuit Modules (VL-SLC)	
Circuit Voltage	35VDC Nominal (24V - 39V)
Protocol Data	FSK Sin Wave (3030 Hz / 6667 Hz)
Circuit Type	Power limited & Supervised
Wiring Class	Class A / Class X
Recommended cable sizes	18 AWG to 14 AWG (0.8mm^2 to 2.5mm^2)
Maximum SLC Current	500mA
Maximum SLC Capacity	254 Addresses
Maximum SLC Resistance	50Ω (200mA) / 20Ω (500mA)
Maximum SLC Capacitance	100nF
Maximum SLC Baud Rate	4334 Bits Per Second (typical)

Compatible SLC Devices

SLC Devices	
Conventional Zone Module with SCI	VDOT-ZMU-SCI
Dual Input Module with SCI	VDOT-DIP-SCI
Relay Dual Output Module For AC240V with SCI	VDOT-DOP-AC240V-SCI
Relay Dual Output with SCI	VDOT-DOP-SCI
Addressable Dual Optical/Heat Detector	VDOT-DPH
Addressable Heat Detector	VDOT-H2(-H)
Mini Input Module	VDOT-MINIIP
Addressable Photoelectric Smoke Detector	VDOT-PY
Addressable Multisensory Detector	VDOT-PYH
Sounder Base	VDOT-S6 BASE
Short Circuit Isolator	VDOT-SCI
Sounder Control Module with SCI	VDOT-SCM-SCI
Low Power Relay Base	VDOT-STB-RL
Base Short Circuit Isolator	VDOT-STB-SCI
Standard Detector Mounting 4” Base	VDOT-UB4
Standard Detector Mounting 6” Base	VDOT-UB4-6

Power Supply

The Velocity MMP Power supply is located on the left hand size of the back box.

There are three different power sizes, depending on whether the panel is a 6 port, 10 port, or 26 port version.

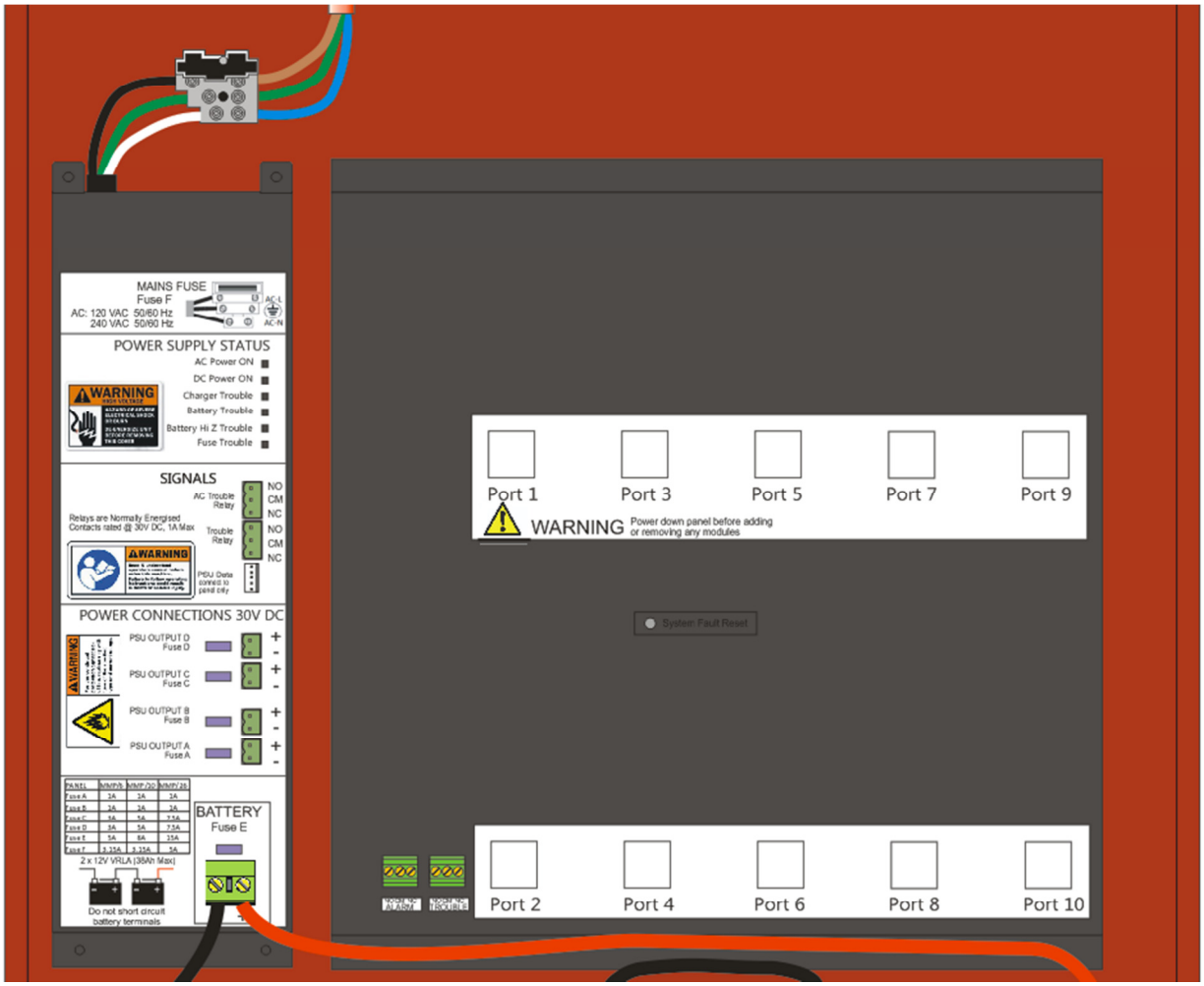

PSU Specifications

	VL-MMP/6	VL-MMP/10	VL-MMP/26
AC Line Voltage	120 – 240 VAC	120 – 240 VAC	120 – 240 VAC
Power Supply Rating	150 Watts	240 Watts	400 Watts
DC Output Voltage	30 VDC	30 VDC	30 VDC
Maximum Output Current	3.9 Amp	5.8 Amp	11.1 Amp
Battery Voltage	27.6VDC	27.6VDC	27.6VDC
Battery Charging Capability	Up to 12.0Ah	Up to 38.0Ah	Up to 65.0Ah
Max Battery Charging Current	1.1 Amp	2.2 Amp	2.2 Amp

ATTENTION:

- DO NOT EXCEED POWER SUPPLY RATINGS, OR MAXIMUM CURRENT RATINGS.
- TO AVOID SPARKING, CONNECT BATTERIES AFTER THE SYSTEM'S MAIN A.C. POWER IS TURNED ON.
- COMPLY WITH VOLTAGE MARKINGS AS SPECIFIED ON LABELS.

PSU Fuses

All fuses are quick blow, rating as shown.

Panel Designation	MMP6	MMP10	MMP26
Fuse A	1A	1A	1A
Fuse B	1A	1A	1A
Fuse C	3A	5A	7.5A
Fuse D	3A	5A	7.5A
Fuse E	5A	8A	15A
Fuse F	3.15A	3.15A	5A

Power Supply Status Indications

LED Description	LED Colour	Indication Method	Event
AC Power ON	Green	ON	Mains power present, converter in operating state
		OFF	Mains power off
DC Power ON	Green	ON	No mains power or converter off
		OFF	When mains power present
Charger Trouble	Yellow	OFF	Normal
		Flashing	Charger Fault
Battery Trouble	Yellow	OFF	Normal
		Flashing	Battery disconnected / Battery fuse blown or removed/ Low Battery
Battery Hi Z	Yellow	OFF	Normal
		Flashing	Battery internal high impedance present
Blown Fuse	Yellow	OFF	Normal
		Flashing	Fuse A, B, C, or D, are blown

1. *Switch SW2 on the charger PCB is used to determine if temperature compensation is used or not. Power down panel completely before removing cover to change the setting.*
2. *Battery circuit resistance measurement is required by BS EN 54-4. The maximum resistance of several tens to hundreds of milliohms varies for different power supplies and depends on their nominal output voltage and power. It can be set on or off by using switch 4 of dip switch SW1 on the charger PCB. Power down panel completely before removing cover to change the setting.*

Power Supply Signals

Description	Details
MAINS FAULT	Continuity between NC & C in normal operating condition. When there is a fault/trouble condition on the mains power, continuity is switched to NO & C. Relay is normally energized and “fail-safe” as the relay will change over in the event of total power failure.
FAULT RELAY	Continuity between NC & C in normal operating condition. When there is any fault/trouble on the PSU or Charger, continuity is switched to NO & C. Relay is normally energized and “fail-safe” as the relay will change over in the event of total power failure.
PSU DATA	Serial data connection from PSU to termination PCB. TO BE USED TO CONNECT TO PANEL ONLY.

Panel Printer

(Velocity MMP systems with a fitted panel printer only)

Loading/Replacing the Printer Paper Roll

The Velocity MMP uses a CUSTOM PLUS2 RS232 panel printer. This printer will accept printer rolls that meet the following requirements:

Specification	PLUS2
Paper Type	Thermal Paper Roll
Paper Width	57mm
Roll Diameter	50mm
Roll Length	30m *(See note)*
Paper Weight	55 to 70gsm

Note: *Paper roll length is approximate, based upon readily available UK sourced paper with 12.7mm core.*

To change the printer roll, proceed as follows. Every time the paper is changed, check inside the device to locate and remove any Scrap pieces of paper.

1. Open the printer cover.

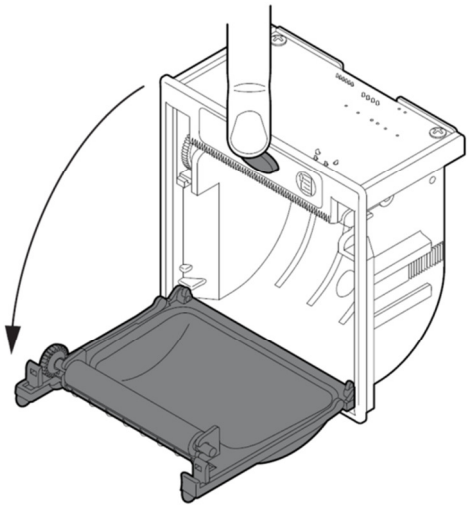

2. Place the roll in the paper compartment and pull out a few centimetres of paper.

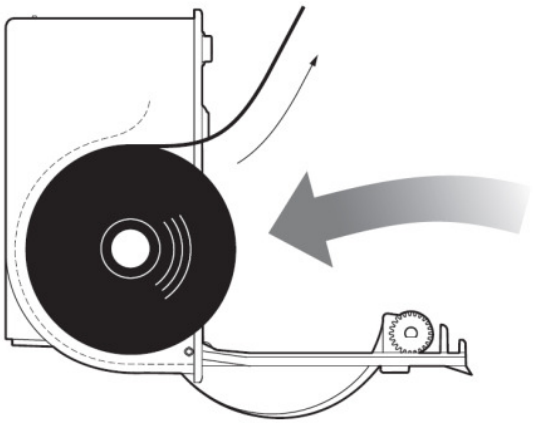

3. Close the printer cover.

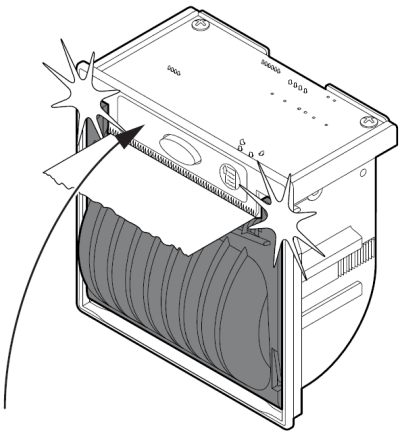

4. Remove any excess paper.

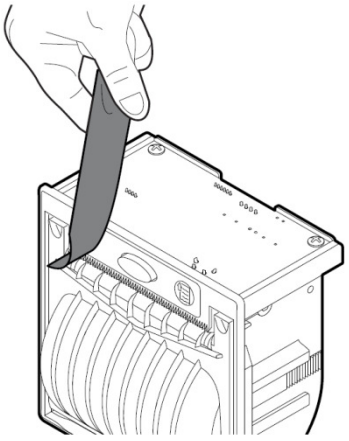

Status LED's

The status of the device is shown via visual feedback. The status LED identifies the hardware status of the printer. The table below shows the various LED signals and their corresponding status.

Status LED	LED Colour	Description
OFF	Green	Printer is off
ON	Green	Printer is on: No error
ON Flash x 2	Green	Printer head over temperature
ON Flash x 3	Green	Printer paper empty
ON Flash x 4	Green	Power supply voltage is incorrect
ON Flash x 5	Green	Reception errors (Parity, frame error, overrun error)
ON Flash x 6	Green	Command is not recognised
ON Flash x 7	Green	Command reception has timed out

Printer Maintenance

The regular cleaning of the panel printer will help maintain its print quality and extend its lifetime. The table below shows the recommended maintenance timeline and cleaning operations.

Every Paper Change	
Printer Head	Use Isopropyl Alcohol
Rollers	Use Isopropyl Alcohol
Every 5 Paper Changes	
Paper Path	Use Compressed Air
Sensors	Use Compressed Air
Every 6 Months or as Needed	
Printer Case	Use Compressed Air or a Soft Cloth

Note: *If the Velocity panel is installed in a dusty environment, the times between the cleaning operations should be reduced.*

FAULT FINDING

See troubleshooting section in Velocity MMP operation manual (Doc: GLT-261-7-2)

Appendix A: SPECIFICATIONS

Code			
Description	Velocity Fire Alarm Panel		
Standard	UL864 10th Edition (Pending)		
Main Supply			
Mains Voltage	120-240V AC		
Mains Frequency	50-60 Hz		
Battery Secondary Supply	VL-MMP/6	VL-MMP/10	VL-MMP/26
Battery Voltage	2 x 12V SLA	2 x 12V SLA	2 x 12V SLA
Battery Charge Current	1.1A	2.2A	2.2A
Battery Charge Voltage	27.3V @ 25°C	27.3V @ 25°C	27.3V @ 25°C
Battery Derating Factor			
On-board Relay Outputs			
Fire Relay (Termination PCB)	(C,NO,NC) Contact rating: 125VAC @ 0.5A / 30VDC @ 1A		
Trouble Relay (Termination PCB)	Normally Energised (C,NO,NC) Contact rating: 125VAC @ 0.5A / 30VDC @ 1A		
Mains Fault Relay (Charger PCB)	Normally Energised (C,NO,NC) Contact rating: 125VAC @ 0.5A / 30VDC @ 1A		
Trouble Relay (Charger PCB)	Normally Energised (C,NO,NC) Contact rating: 125VAC @ 0.5A / 30VDC @ 1A		
Power Supply outputs	VL-MMP/6	VL-MMP/10	VL-MMP/26
Output A (Auxiliary Power)	29V @ 1A	29V @ 1A	29V @ 1A
Output B (Auxiliary Power)	29V @ 1A	29V @ 1A	29V @ 1A
Output C (Control Panel Power)	29V @ 3A	29V @ 5A	29V @ 7.5A
Output D (Control Panel Power)	29V @ 3A	29V @ 5A	29V @ 7.5A
Display			
LCD Display	4.3” Resistive touch screen. 480 x 272 pixel resolution		
LED Indicators	Alarm, Supervisory, Trouble, Alarm Silenced, Power, Controls Active, General Disablement, General Test, NAC Fault/Disablement, NAC Delay, NAC Active, CPU Fault, Acknowledge (VL-ZLX 64 zone LED expansion also available)		
Button Controls	Alarm, Silence, Acknowledge, Scroll Display, Reset, Drill (All other controls via touchscreen)		
General Panel Information			
Maximum Software Zones	254 Zones		
Maximum Event Log	8032 Events		
Software Programming	Via touchscreen or Windows software		
Enclosure	VL-MMP/6	VL-MMP/10	VL-MMP/26
Dimensions H x W x D (mm)	H: 530mm x W: 380mm x D: 150mm	H: 665mm x W: 535mm x D: 190mm	H: 665mm x W: 975mm x D: 190mm
Weight	8.5 kg	15 kg	27 kg
Cable Entries	Top 18 Sides 12 Base 4	Top 26 Sides 8 Base 4	Top 66 Sides 28 Base 20
Module Capacity	6	10	26
Power Supply	5A	10A	15A
Battery Capacity	12Ah max	38Ah max	65Ah max
Environmental			
Operating Temperature	0°C to 49°C		
Relative Humidity	93% Non-condensing		

Appendix B: STANDBY BATTERY REQUIREMENTS

A spreadsheet is available for calculating the standby battery requirements. The information below is provided for information

Model Number	Description	Standby Current (mA) (Mains Fail Condition)	Alarm Current (mA)
VL-MMP/6	Velocity MMP 6 expansion port Fire alarm panel	110	
VL-MMP/10	Velocity MMP 10 expansion port Fire alarm panel	112	
VL-MMP/26	Velocity MMP 26 expansion port Fire alarm panel	120	
VL-SLC	Signalling Line Circuit Module - 1 x Class A	87*	87*
VL-MIM	Multi Input Module - 6 x Class B	48	73
VL-ZMA	Initiating Device Circuit Module - 3 x Class A	37	72
VL-ZMB	Initiating Device Circuit Module - 6 x Class B	62	97
VL-MRM	Multi Relay Module - 3 x Form C	28	116
VL-NCA	NAC Module - 1 x Class A	32	32+ alarm load
VL-NCB	NAC Module - 2 x Class B	32	32+ alarm load
VL-NWM	Network Module - RS485		
VL-MBM	Modbus Module - RS485	TBC	
VL-LAN	Local Area Network Module	TBC	
VL-232	RS232 Module (Printer Driver)	37	37**
VDOT-ZMU-SCI	Conventional Zone Module with SCI	2.6	35.9
VDOT-DIP-SCI	Dual Input Module with SCI	3.0	16.9
VDOT-DOP-AC240V-SCI	Relay Dual Output Module For AC240V with SCI	0.6	3.3
VDOT-DOP-SCI	Relay Dual Output with SCI	0.6	3.3
VDOT-DPH	Addressable Dual Optical/Heat Detector	0.2	5
VDOT-H2(-H)	Addressable Heat Detector	0.2	5
VDOT-MINIIP	Mini Input Module	1.7	7.2
VDOT-PY	Addressable Photoelectric Smoke Detector	0.2	5
VDOT-PYH	Addressable Multisensory Detector	0.2	5
VDOT-S6 BASE	Sounder Base	0.5	1.4
VDOT-SCI	Short Circuit Isolator	0.1 (22mA isolating)	0.1 (22mA isolating)
VDOT-SCM-SCI	Sounder Control Module with SCI	0.8	3.6
VDOT-STB-RL	Low Power Relay Base	0.024	0.11
VDOT-STB-SCI	Base Short Circuit Isolator	0.1 (22mA isolating)	0.1 (22mA isolating)
VL-W-C-W	Velocity Wall Mount Chime (White)	0	55
VL-W-C-R	Velocity Wall Mount Chime (Red)	0	55
VL-W-M-W	Velocity Wall Mount Multitone (White)	0	55
VL-W-M-R	Velocity Wall Mount Multitone (Red)	0	55
VL-W-CS-W	Velocity Wall Mount Chime/Strobe (White)	0	131-368***
VL-W-CS-R	Velocity Wall Mount Chime/Strobe (Red)	0	131-368***
VL-W-MS-W	Velocity Wall Mount Multitone/Strobe (White)	0	167-441***
VL-W-MS-R	Velocity Wall Mount Multitone/Strobe (Red)	0	167-441***
VL-C-CS-W	Velocity Ceiling Mount Chime/Strobe (White)	0	131-368***
VL-C-CS-R	Velocity Ceiling Mount Chime/Strobe (Red)	0	131-368***
VL-C-MS-W	Velocity Ceiling Mount Multitone/Strobe (White)	0	167-441***
VL-C-MS-R	Velocity Ceiling Mount Multitone/Strobe (Red)	0	167-441***
VL-MH-W	Velocity Mini Horn (White)	0	55
VL-MH-R	Velocity Mini Horn (Red)	0	55
VL-W-S-W	Velocity Wall Mount Strobe (White)	0	131-368***
VL-W-S-R	Velocity Wall Mount Strobe (Red)	0	131-368***
VL-C-S-W	Velocity Ceiling Mount Strobe (White)	0	131-368***
VL-C-S-R	Velocity Ceiling Mount Strobe (Red)	0	131-368***
GB6-24	Wall Mount Bell 6”	0	100
GB10-24	Wall Mount Bell 10”	0	100

*SLC Device current and alarm current not included. On batteries use 1.5x current to allow for DC-DC step up voltage

**Current for printing out alarm message not included

***depends on strobe setting

Appendix C: DEVICE ADDRESS SETTING (VDOT-AD2)

Addressable SLC Detectors

This quick instruction of VDOT-AD2 is using a **VDOT-PYH** as an example. Please refer to "VDOT-AD2 programmer instruction manual GLT-303-7-1 for further details.

Preparation

1. VDOT-AD2 requires two 9V PP3 batteries.

a) Before inserting the batteries, confirm the VDOT-AD2 is switched off and check polarity of battery, or damage could result.

Indicate current address

1. Turn the power switch ON.

a) For one second, all LED's are lit and the buzzer sounds.

2. Push the detector into the base on the VDOT-AD2 while turning it clockwise until the detector locks into place.

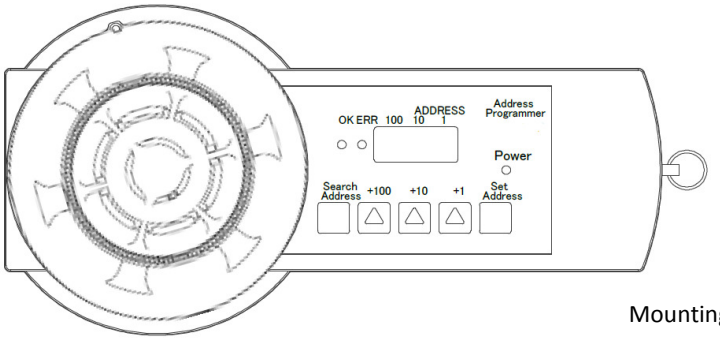

Mounting a detector on an VDOT-AD2

3. Press the [Search] Key

a) Buzzer sounds, and then the VDOT-AD2 starts transmitting to the detector.

b) Do not remove the detector when transmitting, or damage could result.

4. The 7 segment LED Cycles through the following information: [Product Range], [Type of device], [Address] in turn.

a) The buzzer sounds, ERROR LED lights and the 7 segment LED display are an ERROR CODE when an unsupported or defective device is connected.

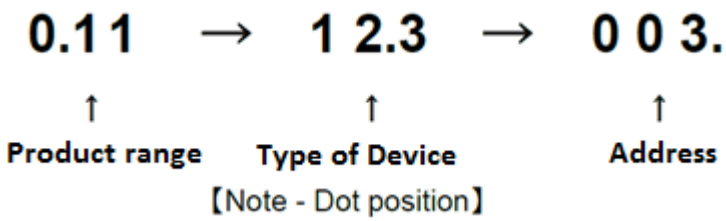

The 7 segment LED distinguishes the Product Range, Device Type and Address by the dot position in the LED.
The information displayed by the 7 segment LED cycles every second and stops whilst displaying the [address] at the end of the second cycle.

Velocity UL Devices are Product range 011

Type of device is assigned to the detectors as below:
VDOT-PYH: 153

Pressing any key at any time during the information collection cycle, forces the VDOT-AD2 to display the address, and await new address selection.

Set new address

1. +100, +10, +1 keys are used to select the new address.

2. Press the [Set] key

a) The buzzer sounds, and all LED's are turned off. The VDOT-AD2 then starts transmitting to the detector.

b) Do not remove the detector.

3. The 7 segment LED shows the new address and "complete" LED lights. If an unsupported or defective device is connected the buzzer sounds, ERROR LED is lit and the 7 segment LED reads ERROR CODE.

4. To continue changing the address for another device, change the detector and then repeat from paragraph 3.

To finish changing addresses, turn the POWER SW off.

Addressable SLC Modules

This quick instruction of VDOT-AD2 is using a **VDOT-DIP-SCI** as an example. Please refer to "VDOT-AD2 programmer instruction manual GLT-303-7-1 for further details.

Address Setting

Use VDOT-AD2 Programmer for setting the address of the module prior to installation. VDOT-DIP-SCI has an address given at random from factory. Connect the Programmer with the address setting port to change the address to any of 1-254 (decimal), with reference to the instruction manual of VDOT-AD2 Programmer. The address can be set regardless of whether power supply from the control panel is turned on or off. During setting address, the module does not respond to the control panel.

Set the address of module according to Job data.

Appendix D: PRODUCT CODES

Description	Product Code
Panels	
6 Module Capacity – LCD Only (Red)	VL-MMP/6
10 Module Capacity – LCD Only (Red)	VL-MMP/10
10 Module Capacity – LCD & 64 Zonal LED's (Red)	VL-MMP/10/64
10 Module Capacity – LCD & Printer (Red)	VL-MMP/10/P
10 Module Capacity – LCD & Printer & 64 Zonal LED's (Red)	VL-MMP/10/P/64
26 Module Capacity – LCD Only (Red)	VL-MMP/26
26 Module Capacity – LCD & 64 Zonal LED's (Red)	VL-MMP/26/64
26 Module Capacity – LCD & Printer (Red)	VL-MMP/26/P
26 Module Capacity – LCD & Printer & 64 Zonal LED's (Red)	VL-MMP/26/P/64
Annunciator Panel (Red)	VL-MMP/RA
6 Module Capacity – LCD Only (Black)	VL-MMP/6-B
10 Module Capacity – LCD Only (Black)	VL-MMP/10-B
10 Module Capacity – LCD & 64 Zonal LED's (Black)	VL-MMP/10-B/64
10 Module Capacity – LCD & Printer (Black)	VL-MMP/10-B/P
10 Module Capacity – LCD & Printer & 64 Zonal LED's (Black)	VL-MMP/10-B/P/64
26 Module Capacity – LCD Only (Black)	VL-MMP/26-B
26 Module Capacity – LCD & 64 Zonal LED's (Black)	VL-MMP/26-B/64
26 Module Capacity – LCD & Printer (Black)	VL-MMP/26-B/P
26 Module Capacity – LCD & Printer & 64 Zonal LED's (Black)	VL-MMP/26-B/P/64
Annunciator Panel (Black)	VL-MMP/RA-B
Modules	
Signalling Line Circuit Module - 1 x Class A	VL-SLC
Multi Input Module - 6 x Class B	VL-MIM
Initiating Device Circuit Module - 3 x Class A	VL-ZMA
Initiating Device Circuit Module - 6 x Class B	VL-ZMB
Multi Relay Module - 3 x Form C	VL-MRM
NAC Module - 1 x Class A	VL-NCA
NAC Module - 2 x Class B	VL-NCB
Network Module - RS485	VL-NWM
Modbus Module - RS485	VL-MBM
Local Area Network Module	VL-LAN
RS232 Module (Printer Driver)	VL-232

Appendix E: Ground Fault Impedance values

Below is a table of the impedance values that will cause a ground fault on the MMP panel under normal operating conditions (running on mains power)

Circuit	Impedance that will signal a Ground Fault
PSU Output +	500kΩ
PSU Output -	47kΩ
NAC Class A +*	47kΩ
NAC Class A -*	330kΩ
NAC Class B +*	94kΩ
NAC Class B -*	330kΩ
SLC +	500kΩ
SLC -	47kΩ
Multi-Input Module (MIM) +	500kΩ
Multi-Input Module (MIM) -	47kΩ
Zone Class A +	500kΩ
Zone Class A -	47kΩ
Zone Class B +	500kΩ
Zone Class B -	47kΩ
Network Module, terminal A	N/A (Isolated from system voltage)
Network Module, terminal B	N/A (Isolated from system voltage)
Multi-Relay Module (MRM) NO	N/A (Isolated from system voltage)
Multi-Relay Module (MRM) CM	N/A (Isolated from system voltage)
Multi-Relay Module (MRM) NC	N/A (Isolated from system voltage)

*in quiescent condition, the NAC has a reverse voltage on its terminals. So that a ground fault to NAC + will cause a negative ground fault, and a ground fault to NAC - will cause a negative ground fault. When active, the impedance levels, and the fault messages reverse.