ADDRESSABLE PHOTOELECTRIC SMOKE DETECTOR VDOT-PY



Description

Introduction

The VDOT-PY is an attractively-styled, low profile, analog addressable, hotoelectric smoke detector for use with the VelocityMMP control panel series in analog fire alarm systems. This analog addressable photoelectric smoke detector has a specific detector address to provide exact detector locations throughout the installation. his allows for constant monitoring of the detector sensitivity and reports the detectors condition to the fire alarm control panel.

Detector Models

The VDOT-PY has a new sophisticated smoke chamber design and an orange sensor LED which can provide the same sensitive detection regardless of the type of smoke.

This detector has a chemically etched, stainless steel insect screen, therefore reducing the ingress of insects and airborne contaminants.

The VDOT-PY has two terminals for connection onto the two wire loop. The remaining terminal provides a switched current sink function which operates when the detector goes into alarm condition, suitable or the operation of an auxiliary function such as a remote indicator. Terminal 3 (RIL) is limited to 2mA.

Features

- Responds well to both black and white smoke.
- Low Profile, stylish appearance.
- Low monitoring current.
- OMNIVIEW™ 360º LED.
- Remote indicator output.
- Locking mechanism to avoid unauthorised removal.
- Supplied with protective dust cover.
- Address settable from 001 to 254 by a dedicated programmer.
- Automatic sensitivity compensation.
- Adjustable sensitivity via control panel software.
- Corresponds to auto-test function of Velocity MMP series control panel.

Dimensions:

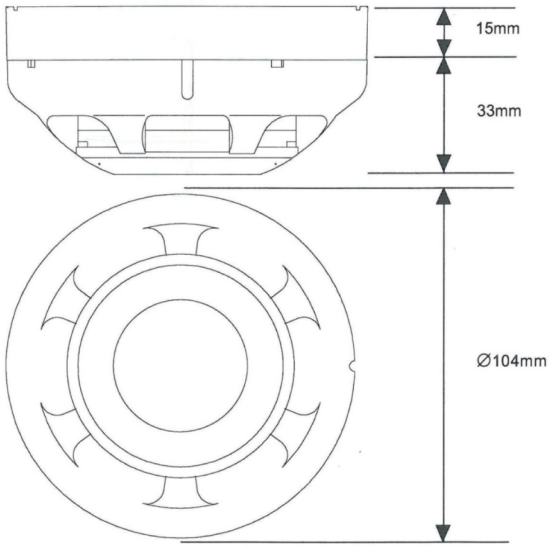

Mounting Base Models

Model	Description	Instruction Manuals	Diameter	Number of Terminals
VDOT-UB4	Standard Mounting Base	GLT-299-7-6	104 mm (4 Inch)	4
VDOT-UB4-6*	Larger Mounting Base	GLT-299-7-7	160 mm (6 Inch)	4
VDOT-S6 BASE	Sounder Mounting Base	GLT-299-7-10	160 mm (6 Inch)	5
VDOT-STB-RL	Relay Mounting Base	GLT-299-7-9	104 mm (4 inch)	6
VDOT-STB-SCI	Short Circuit Isolator Base	GLT-299-7-8	104 mm (4 Inch)	4
VDOT-ADP**	Adaptor Mounting Plate	GLT-299-7-11	160 mm (6 Inch)	NONE

** The Model VDOT-UB4-6 base is intended for applications where a 4 inch square or octagonal electrical junction box is required.*

*** The VDOT-ADP Adaptor Mounting Plate is intended for the VDOT-STB-RL Relay Mounting Base and VDOT-STB-SCI Short Circuit Isolator base for applications where a 4 inch square or octagonal electrical juntion box is required.*

NOT TO BE USED FOR INSTALLATION PURPOSES.
Velocity reserves the right to make changes at any time without notice in prices, colours, materials, components, equipment, specifications and models and also to discontinue models.

Wiring

SLC Line impedance is 50Ω at maximum and the maxiumum length is 2km. Use cable AWG12-20 for wiring.

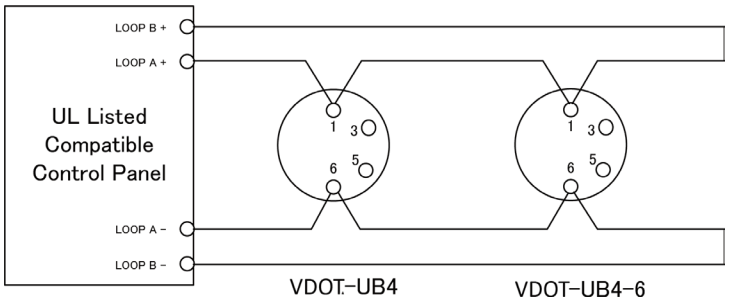

Terminals

The VDOT-PY detectors all have three terminal connections and the terminals are configured as follows:

Terminal	Description
1	SLC Positive
6	SLC Negative
3	To activate the VDOT-STB-RL Relay Base

Note: Terminal 3 is used for the Relay Mouting Base VDOT-STB-RL

▪ Specifications

Specifications	VDOT-PY
Detector Element	LED : Peak wavelength 630 nm Photodiode : High-output, high-speed silicon photodiode
LED Visual Indicator	Stand-by - Flashing green LED Alarm - Solid red LED with flashing green
Operating Voltage	20 VDC to 38 VDC Peak
System Voltage	35 VDC
Stand-by Current	200 μA
Alarm Current (with red LED)	5 mA
Sensitivity	0.69 %/Ft. to 2.86 %/Ft
Operating Temperature	-10 °C to +55 °C (14 °F to 131 °F)
Storage Temperature	-20 °C to +60 °C (-4 °F to 140 °F)
Relative Humidity	≤ RH 95 % non-condensing
Addressing Method	Soft addressing, Non-Volatile EEPROM
Address	1 to 254 (decimal)
Maximum Quantity Per loop	254 units
Material	IDEMITSUKOSAN R2200
Dimensions	φ104 mm x H 33 mm (Detector head only) φ104 mm x H 48 mm (Detector head and VDOT-UB4 Base)
Weight	105 g (Detector head only) 170 g (Detector head and VDOT-UB4)
Standard	UL268

All specifications are subject to change without any notice.
For more information, contact with VELOCITY.

Velocity® DETECTION OVER TIME
Zeta Alarms Limited
72-78 Morfa Road, Swansea
SA1 2EN
Tel: +44 1792 455 175 FAX: +44 1792 455 176

Distributed By