Before Installation

Please read these instructions carefully and keep for future reference.
The information in this document is subject to change without notice. For updates please refer to our website.

⚠ CAUTION

Do not use the products outside the rated power supply voltage range specified in the Specifications. It may cause a fire or damage to equipment.

⚠ CAUTION

Do not disassemble, repair, or modify the products. It may cause a fire or electric shock.

⚠ CAUTION

Make sure to turn the power off before commencing any wiring work. Otherwise it may cause electric shock or damage to equipment.

Note: Follow the requirements for the installation of the products in accordance with the Specifications. Otherwise it may cause malfunction.

Note: Do not install the product in any location where oil, dust, iron powder, chemicals, or hydrogen sulphide may occur or affect the product. It may cause damage to equipment.

Section 1 – INTRODUCTION

1.1 General description

The VOT-PY is an attractively-styled, low profile, analog addressable, photoelectric smoke detector for use with the Velocity MMP Panels in analog fire alarm systems.

This analog addressable photoelectric smoke detector has a specific detector address to provide exact detector locations throughout the installation. This allows for constant monitoring of the detector sensitivity and reports the detectors condition to the fire alarm control panel.

1.2 LED Indicator

LED Indicators for 360° visibility (OMNIVIEWTM 360°) of VDOT-PY operate as follows: Green LED flashes in normal operation. Red LED illuminates and Green LED flashes in an alarm condition.

1.3 VDOT-PY features

* Low profile, stylish appearance
* Soft addressing
* Low monitoring current
* Supplied with protective dust cover
* OMNIVIEWTM 360o LED Indicator for polling and fire alarm indication
* Photoelectric detector, detecting visible particles of combustion
* Automatic compensation for smoke detector contamination

Section 2 – GENERAL OPERATION

The VDOT-PY chamber consists of a light emitting diode (LED) and photodiode arrangement. The chamber contains a unique design which allows smoke to enter the chamber while preventing external light from affecting the photodiode.

The VDOT-PY has chemically etched, stainless steel insect screen therefore reducing the ingress of insects and airborne contaminants. The chamber is designed so that the light emitted by the LED is not directed to the photodiode. In the event of fire, particles of smoke enter the chamber and scatter the light in the active area of the chamber. The scattering effect increases the light in the chamber, causing more light to be detected by the photodiode. The photodiode input level is sampled to sense smoke density and transmitted as a digitally encoded value to the control panel. When the smoke density exceeds a preset threshold in the control panel, the control panel indicates a fire alarm condition.

The control panel can adjust the detector alarm threshold to compensate for contamination that might accumulate in the chamber within the smoke detector limits.

Section 3 – DIMENSIONS

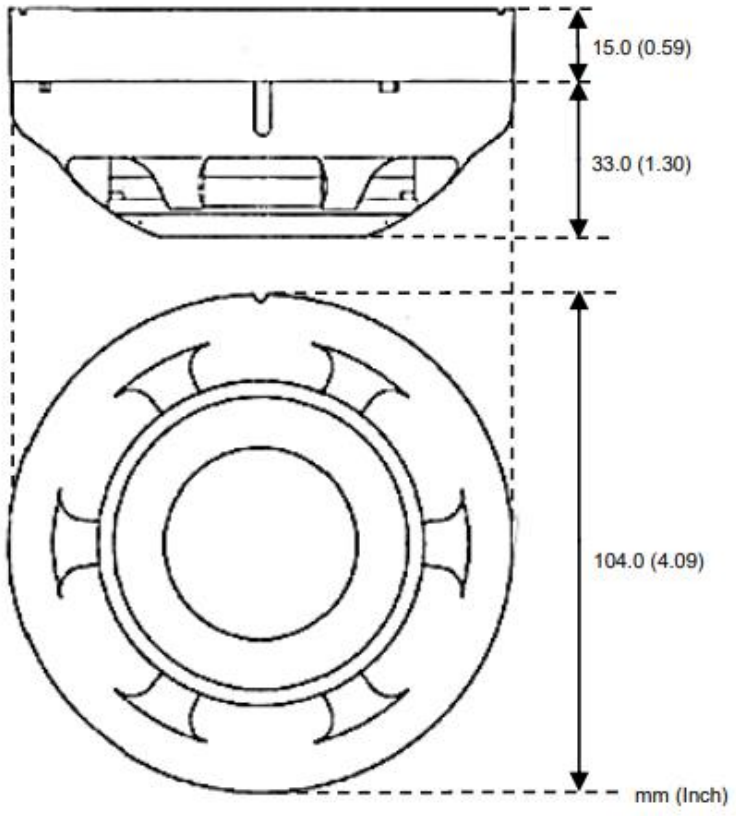

Figure1: Dimension of VDOT-PY

Section 4 – TERMINALS

The VDOT-PY smoke detectors have three terminal connections and the terminals are configured as follows:

Terminal Description
1 SLC Positive
6 SLC Negative
3 To activate VDOT-STB-RL Relay Base

Note: Terminal 3 is used for the Relay Mounting Base VDOT-STB-RL.

Section 5 – DETECTOR MODELS

VDOT-PY may be installed in the same signaling line circuit (SLC) as the detectors below:

VDOT-PYH	Combination photoelectric smoke and heat detector 57 °C (135 °F) with 8.3 °C (15 °F) rate of rise
VDOT-DPH	Combination photoelectric smoke (dual wave length) and heat detector 57 °C (135 °F) with 8.3 °C (15 °F) rate of rise
VDOT-H2	Analog addressable heat detector 57 °C (135 °F) with 8.3 °C (15 °F) rate of rise
VDOT-H2(-H)	Analog addressable heat detector 83 °C (181 °F)

Section 6 – BASE MODELS

There are 5 mounting bases that are available for use with the VDOT-PY. In order to operate correctly, it is important to use the appropriate mounting base as indicated in the table below. Refer to the specific mounting base instruction manuals for details.

VDOT-UB4	Standard mounting base	4 inch Dia	Terminals x4
VDOT-UB4-6*	Larger mounting base	6 inch Dia	Terminals x4
VDOT-S6	Base Sounder mounting base	6 inch Dia	Terminals x5
VDOT-STB-RL	Relay mounting base	4 inch Dia	Terminals x6
VDOT-STB-SCI	Short circuit isolator base	4 inch Dia	Terminals x4
VDOT-ADP**	Adapter mounting plate	6 inch Dia	

* The Model VDOT-UB4-6 mounting base is intended for applications where a 4 inch square or octagonal electrical junction box is required.

** The VDOT-ADP Adapter Mounting Plate is intended for the VDOT-STB-RL Relay Base and VDOT-STB-SCI Short Circuit Isolator Base for applications where a 4 inch square or octagonal electrical junction box is required.

Section 7 – ADDRESS SETTING

The VDOT-PY requires compatible addressable communications to the control panel in order to function properly. All detectors have random addresses from the factory before installation. The VDOT-AD2 Address Programmer is used for setting the address between 1 and 254 decimal of all devices prior to installation. See Annex A for the handling. Once addressed connect and configure these detectors to UL listed Velocity MMP Panels.

Section 8 – INSTALLATION

8.1 Before installing

These smoke detectors must be installed in compliance with the manuals of the Velocity Control Panels. The installation must meet the requirements of the Authority Having Jurisdiction (AHJ). The detectors offer maximum performance when installed in compliance with the National Fire Protection Association (NFPA); see NFPA 72.

Note: ZETA ALARM SYSTEMS LIMITED is not responsible for the product which is improperly installed, maintained and tested.

8.1.1 Location requirement

When installing the detector please consider the following items. Otherwise the detector might not provide optimum performance.

- Indoor use only.
- Place the detector away from a ventilation fan or the air outlet of air conditioner, at least 1.5 m (5 ft.).
- On the ceiling, place the detector at least 10 cm (4 in.) from the wall.
- On the wall, place the detector between 10 to 30 cm (4 to 12 in.) below the ceiling.

The detector should not be installed in places such as:
- Place with plenty of air flow (close to a ventilation fan, air conditioner, or place with drafts)
- Place close to heating appliance
- Place with a constantly high temperature or humidity
- Place with lots of dust or insects
- Place where vapor can directly come in
- Place with exhaust gas such as garage

8.2 Smoke Detector Applications

Smoke detectors are designed to sense the presence of smoke particles. In order to sense the particles, smoke detectors must be placed where smoke can reach them. When determining the location of smoke detectors, potential fire locations should first be evaluated, and paths of smoke flows should be determined. It is preferable to conduct actual field tests wherever it is practical to do so. It is desirable to locate smoke detectors at the points of intersection of smoke travel from potential fire sources throughout the area. Ceiling height, construction, and ventilation affect the performance of smoke detectors.

8.2.1 Avoidance of unwanted alarms

Smoke detectors can be affected by various environmental factors (other than smoke), which may accidentally activate the detectors. It is necessary to consider where smoke detectors should be installed in order to minimize unwanted alarms. Listed below are some common sources of unwanted alarms to be considered when locating smoke detectors

- Steam and moisture
- Chemical fumes
- Cooking equipment
- Welding, cutting, and industrial processes
- Dust or lint
- Engine exhaust
- Vibration or shock
- Excessive airflow
- Lightning
- Radio frequency radiation

The smoke detector signals a dirty sensor trouble to the control panel when it reaches the preset limit. The dirty sensor trouble indicates the detector is in need of servicing.

8.2.2 Spacing of Smoke Detectors

The recommended spacing of spot type smoke detector is maximum 9.1 m (30 ft.), based on the detector installation on a smooth ceiling at 3 m (10 ft.) high. All points on the ceiling shall have a detector within a distance equal to or less than 0.7 times the nominal 9.1 m (30 ft.) spacing.

Note: It is recommended that smoke detectors be installed on S = 9.1 m (30 ft.) centers, on smooth ceilings. Refer to NFPA 72 National Fire Alarm Code for additional information on spacing adjustments.

Spot-type smoke detectors must be located on the ceiling or, if on a sidewall, between the ceiling and 30 cm (12 in.) down from the ceiling to the top of the detector.

8.2.3 Stratification

Stratification of air in a room can hinder smoke from reaching ceiling-mounted smoke detectors. In order to improve detection response in situations where stratification exists, it might be necessary to install additional smoke detectors on sidewalls or at locations below the ceiling, as shown in Figure 2.

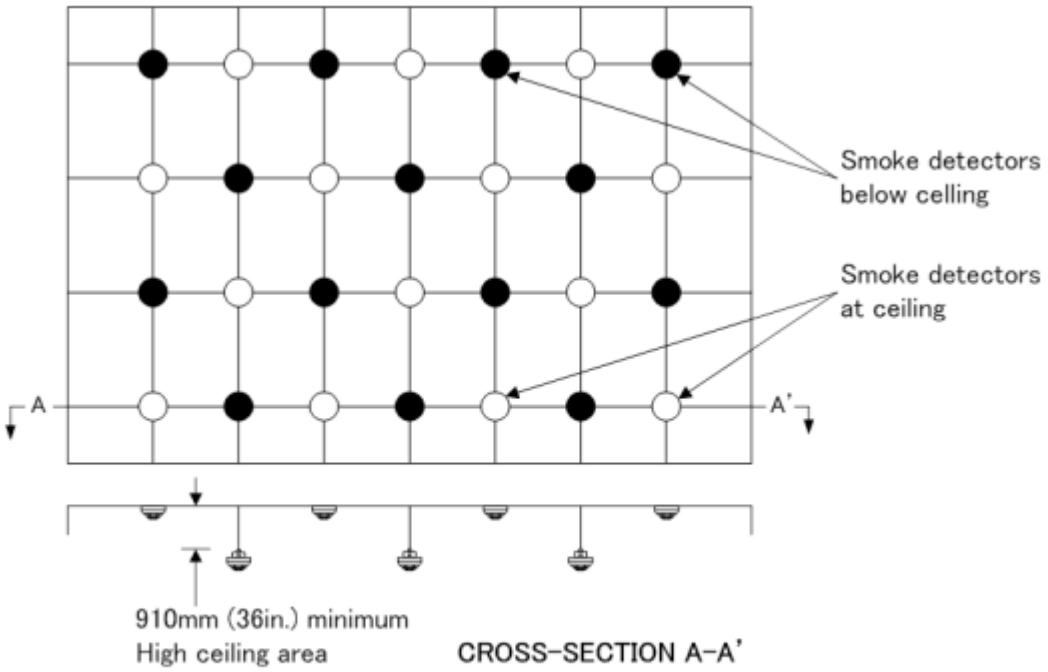

Figure 2: Smoke detector layout accounting for stratification

8.2.4 Partitions

It is recommended that the distance between smoke detectors should not exceed a nominal spacing of 9.1 m (30 ft.) and there should be detectors within a distance of one-half the nominal spacing, measured at right angles from all walls or partitions extending upward to within the top 15 percent of the ceiling height.

8.2.5 Exposed solid joists

Exposed solid joists may impede the flow of smoke to detectors. A joist is defined as greater than 10 cm (4 in.) in depth and spaced less than 91 cm (3 ft.) apart. The detectors must be mounted on the bottom of the joists.

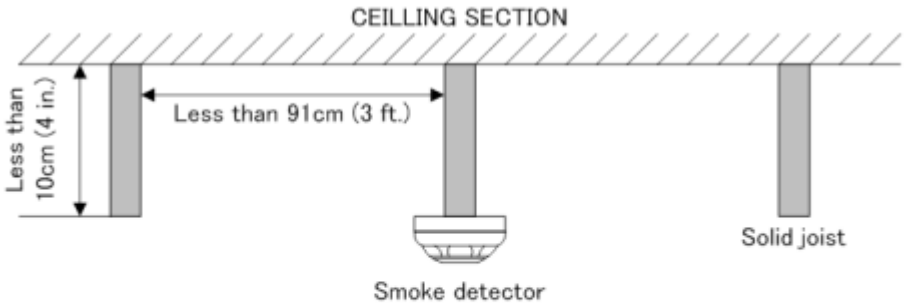

Figure 3: Smoke detector spacing — solid joist construction (side view)

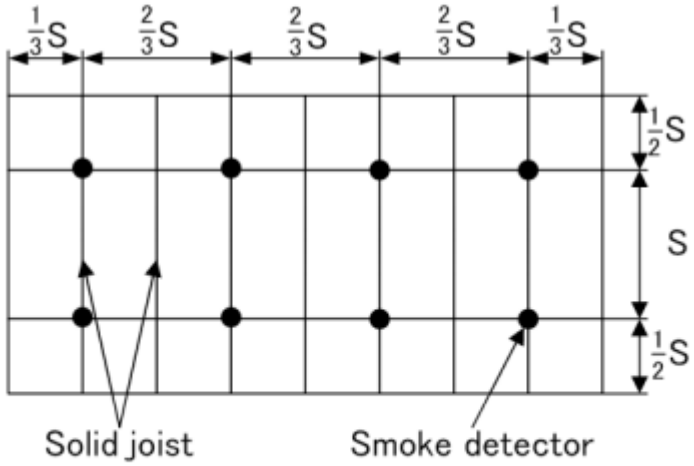

Figure 4: Smoke detector spacing — solid joist construction (plan view)

Note: Joists less than 10 cm (4 in.) deep are considered flat ceilings. Smoke detectors can be mounted on ceilings or on the bottom of joists.

8.2.6 Exposed beams

Beams are defined as any members extending 10 cm (4 in.) or more down from the ceiling and spaced more than 91 cm (3 ft.) apart. The spacing of smoke detectors must be reduced in the direction perpendicular to the beam.

Smoke detectors shall be located on the ceiling in each beam pocket if the ratio of beam depth (D) to ceiling height (H), D/H, is greater than 0.1, and the ratio of beam spacing (W) to ceiling height (H), W/H, is greater than 0.4. Smoke detectors shall be located on the bottom of each beam if either the ratio of beam depth (D) to ceiling height (H), D/H, is less than 0.1, or the ratio of beam spacing (W) to ceiling height (H), W/H, is less than 0.4.

Calculation:

D/H > 0.1 and W/H > 0.4 : Mount the detector on the ceiling
D/H < 0.1 or W/H < 0.4 : Mount the detector on the bottom of the beam

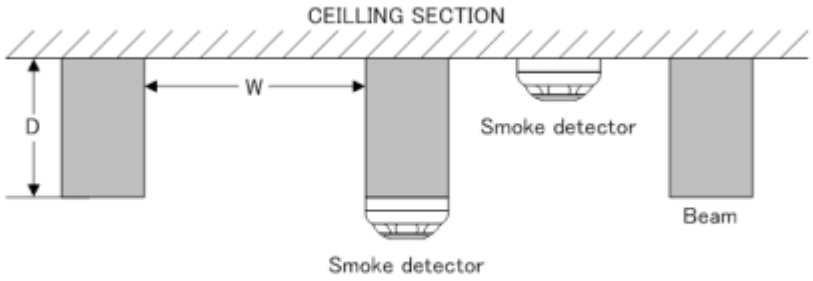

Figure 5: Smoke detector spacing — beam construction (side view)

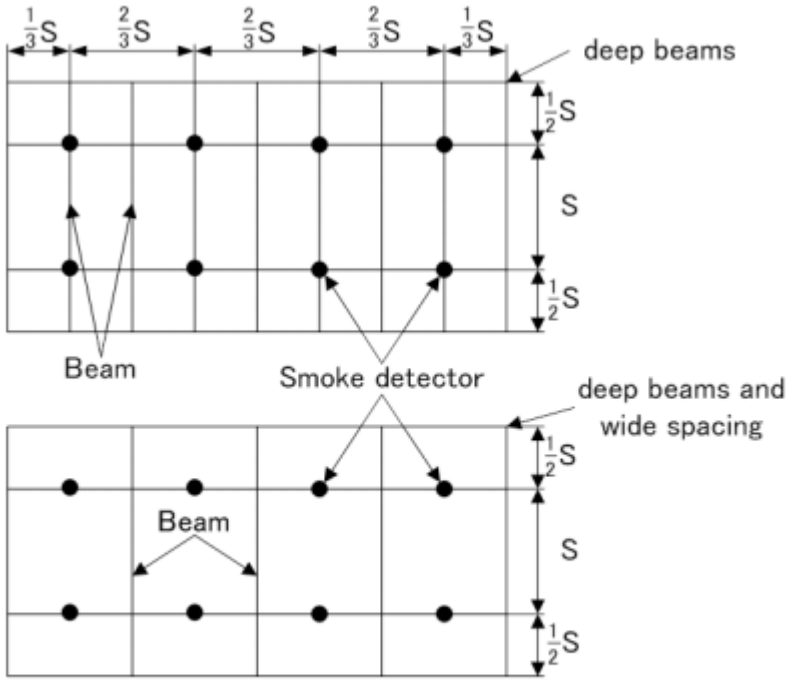

Figure 6: Smoke detector spacing — beam construction (plan view)

8.2.7 Sloped ceiling (peaked and shed)

In the rooms with peaked ceilings, the first row of detectors must be located within 1 m (3 ft.)(measured horizontally) of the ceiling peak, but not closer than 10 cm (4 in.) vertically to the peak.

Additional detectors, if required, must be located based on the horizontal projection of the ceiling and the type of ceiling construction. In the rooms with shed ceilings having a slope greater than 1 m in 8 m (1 ft. in 8 ft.), the first row of detectors must be located within 1 m (3 ft.) of the high end of the ceiling.

Additional detectors, if required, must be located based on the horizontal projection of the ceiling and the type of ceiling construction. For a ceiling slope of less than 30 degrees, all detectors must be spaced using the height at the peak. For a ceiling slope of 30 degrees or greater, all detectors must be spaced using the average slope height or the height of the peak.

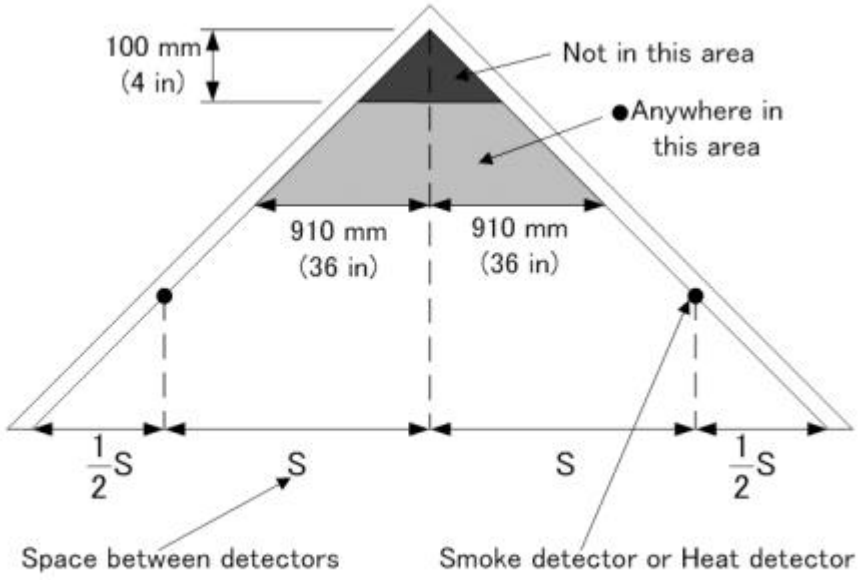

Figure 7: Smoke detector spacing — Sloped ceiling (peaked type)

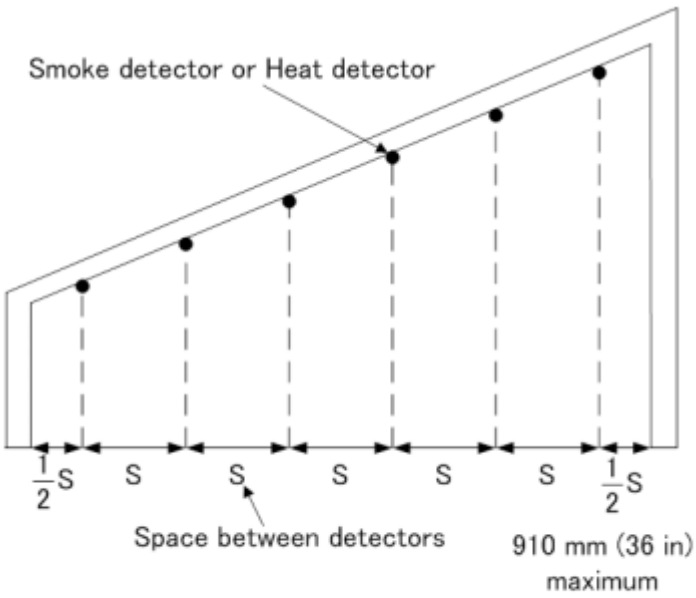

Figure 8: Smoke detector spacing — Sloped ceiling (shed type)

8.3 Procedure for installing

Note: All wiring must be installed in compliance with the National Electrical Code, applicable local codes and the Authority Having Jurisdiction.

Proper wire gauges should be used. The installation wires should be color coded to limit wiring mistakes and ease system troubleshooting. Improper connections will prevent a system from responding properly in the event of a fire.

Remove power from the communication line before installing detectors.

1. Pass the field wiring through the rear center cable opening in the mounting base. Install the base to the electrical box with screws via the base mounting holes. Connect the field wiring to the base terminals, as detailed in Figure 9,. Do not use looped wire under terminals (See Figure 10).

2. Using the VDOT-AD2 Address Programmer, set the desired address for each detector. See Annex A for the handling.

3. Install the detector into the mounting base, making sure the wiring does not obstruct mounting of the detector head. Push the detector into the mounting base while turning it clockwise until the detector locks into place. Use a small hexagonal wrench to set the tamper resist feature (if required), see Figure 11.

4. After the detector has been installed, snap on the supplied plastic dust cover onto the detector to keep out dust during construction.

5. Apply power to the control panel to configure the detectors to the fire alarm control panel.
6. Test the detector(s) as described in the TESTING section of this manual.

⚠ CAUTION

After commissioning has been completed remove and discard the dust cover.

⚠ CAUTION

Smoke and heat detectors are not to be used with detector guards unless the combination has been evaluated and found suitable for that purpose.

Notes:
- If the dust cover is not used while construction work is being completed exposure to a slightly dusty environment, can cause unwanted alarms after the commissioning the detectors.
- In the event of an unwanted alarm after commissioning clean the detector and re-install.
- If the detector still produces unwanted alarms replace the detector.

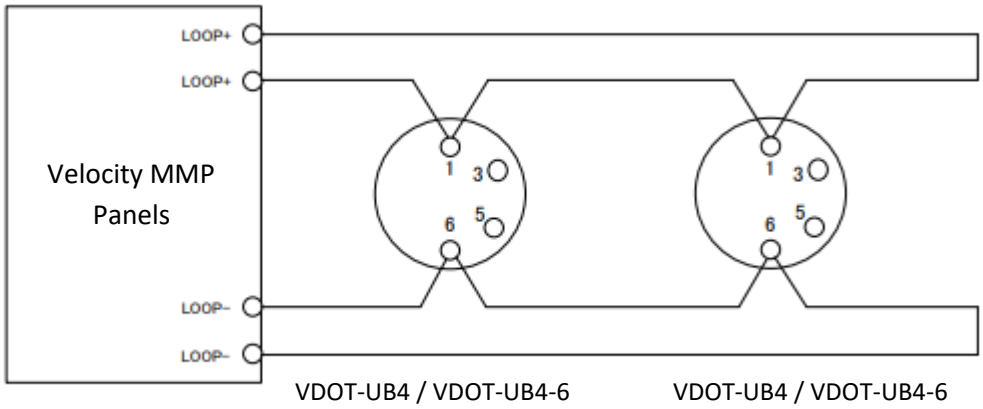

Figure 9: Wiring diagram for VDOT-UB4 and VDOT-UB4-6

SLC Line impedance is 50Ω at maximum and the maximum length is 2km.
Refer to the manual of control panel Velocity MMP series to determine correct maximum loop load and maximum loop resistance for devices connected to each loop.

⚠ CAUTION

Use cable AWG12-20 for wiring. Do not connect different gauge cables at one terminal in order to prevent loosening.

⚠ CAUTION

Do not connect cables in reverse polarity. Failure to connect the polarity correctly could result in damage to other equipment.

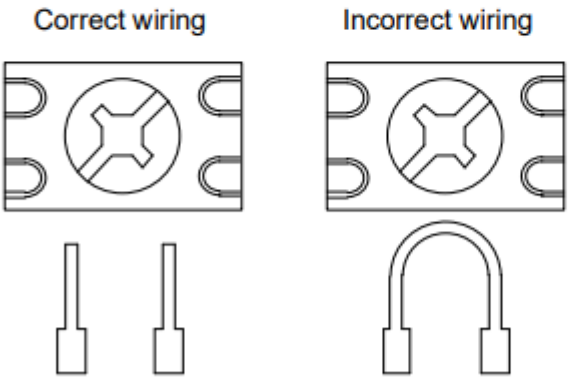

Figure 10: Correct and incorrect wiring method

⚠ CAUTION

For system monitoring — For terminals 1 and 6 do not use looped wire under terminals. Break wire run to provide monitoring of connections.

8.4 Tamper resistance feature

The VDOT-UB series, VDOT-S6 Base, and VDOT-STB series of smoke/heat detector mounting bases have a tamper resist feature that works in conjunction with the detectors. When this feature is enabled, the detectors cannot be removed from the base without the use of a small hexagonal wrench. To avoid unauthorized removal of the detector, turn the locking screw in the mounting base counter-clockwise until the screw extends out about 4 mm (3/16 in.) from the rim of the base, as shown in the Figure 11.

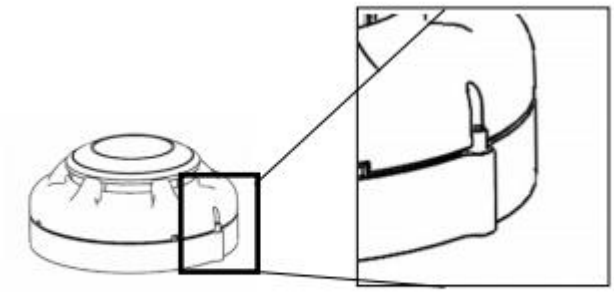

Figure 11: Position of the locking screw to lock the detector

Note: If the detector is installed on a high ceiling where a tool (ladder, etc.) is needed, it is not recommended to use the locking screw.

Section 9 – TESTING

Notes:
- Before testing, notify the proper authorities that the system is undergoing maintenance, and will temporarily be out of service.
- Disable the system to prevent unwanted alarms.
- All sensors must be tested after installation and periodically thereafter.
- Testing methods must satisfy the Authority Having Jurisdiction (AHJ).
- When carrying out site testing of the detector, the control panel must be set to “One Man Walk Test” mode prior to the test.

Sensors offer maximum performance when tested and maintained in compliance with NFPA 72. The sensor may be tested in the following ways:

A. For the smoke detector testing (Go / No-Go)

1. To test the optical detector, introduce a certain amount of aerosol into the detector’s head, using HSI FIRE & SAFETY Aerosol canned smoke testers “25S” or “30S”. Please follow the manufacturer’s recommendations on their use.

2. Check that the detector gives an alarm condition within 15 seconds. Check the red LED indicator is on and the green LED is flashing on the VDOT-PY detector. If the red LED fails to light, check the power to the detector and the wiring in the detector base.

3. After the detector has given the alarm condition, the detector automatically is reset by the control panel. It may be necessary to allow a short time to elapse before resetting the detectors, to allow any residual smoke from the test to disperse.

4. Detectors that fail these tests should be cleaned as described under MAINTENANCE Section and retested. If the detectors still fail these tests they should be returned for repair.

5. Before proceeding to the next detector, ensure that the detector previously tested does not re-operate due to the presence of residual aerosol.

B. For the smoke detector sensitivity

1. Detector sensitivity can be tested using Smoke Detector Sensitivity Analyzer Model 501-B (Gemini Scientific Corp.).
Please follow the manufacturer's recommendations on their use.
Where the sensitivity limits for the Analyzer are 0.6 %/ft. ~ 1.3 %/ft.

2. Check that the detector gives an alarm condition within 40 seconds after the aerosol of which the concentration controlled with the Analyzer was introduced into the detector's head. Check the red LED indicator is on and the green LED is flashing on the VDOT-PY detector. If the red LED indicator fails to light, check the power to the detector and the wiring in the detector base.

3. After the detector has given the alarm condition, the detector automatically is reset by the control panel. It may be necessary to allow a short time to elapse before resetting the detectors, to allow any residual aerosol from the test to disperse.

4. If the detector has a history of nuisance alarm, check that the detector doesn't give an alarm condition within 50 seconds when the aerosol less than low sensitivity limit was introduced into the detector's head.

5. Detectors that fail these tests should be cleaned as described under MAINTENANCE Section and retested. If the detectors still fail these tests they should be returned for repair.

6. Before proceeding to the next detector, ensure that the detector previously tested does not re-operate due to the presence of residual aerosol.

Section 10 - MAINTENANCE

Notes: •Before cleaning, notify the proper authorities that the system is undergoing maintenance, and therefore the system will temporarily be out of service.

•Disable the loop or system undergoing maintenance to prevent unwanted alarms. It is recommended that the sensor be removed from its mounting base for easier cleaning and that sensors be cleaned at least once a year.

⚠ CAUTION

Do not disassemble, repair, or modify the products. It may cause a fire or electric shock.

1. Carefully remove the detector head from its base.

2. Use a soft, lint-free cloth, moistened with alcohol for sticky deposits, to clean the plastic enclosure.

3. Using a soft bristle brush (e.g. an artist's paint-brush) carefully brush between the vanes of the photo chamber in a linear motion away from the apertures on the plastic enclosure.

4. Ensure that no debris remains on or around the photo chamber once cleaning is complete. If the unit needs further cleaning, or is damaged or corroded, please return the complete detector to Zeta Alarms Ltd for warranty service.

5. Reinstall the detector.

6. Test the detector according to Section 9 - TESTING.

7. Set the system back to normal operation mode.

8. Notify the proper authorities that the system is back on line.

Section 11 – SPECIFICATIONS

Detector Element LED	(Peak wavelength: 630 nm) PD (High-output, high-speed silicon photodiode)
LED Visual Indicator	Stand-by - Flashing green LED Alarm - Solid red LED with flashing green
Operating Voltage	20VDC to 38VDC peak
System Voltage	35VDC Stand-by Current 200 µA
Alarm Current (with red LED)	5 mA
Sensitivity	0.69 %/Ft. to 2.86 %/Ft.
UL Ambient Installation Temp	0 °C to +38 °C (32 °F to 100 °F)
Operating Temp	-10 °C to +55 °C (14 °F to 131 °F)
Storage Temp	-20 °C to +60 °C (-4 °F to 140 °F)
Relative Humidity	≦ RH95% non-condensing
Addressing Method	Soft addressing, Non-Volatile EEPROM
Address	1-254 (decimal)
Maximum Quantity per Loop	254 units (See Note 1)
Material	R2200 (Idemitsu Kosan Co.,Ltd)
Dimensions	Φ104mm D x 42mm H (Φ4.1” x 1.65” H) (Detector head) Φ104mm x 15mm H (Φ4.1” x 0.59” H) (with VDOT-UB4 base)
Weight	105g (Detector head only) 170g (Detector head and VDOT-UB4)
Standard	UL268

Note 1: Please refer to the Control Panel detailed procedures for complete instruction on additional technical details pertaining to this connection.

Annex A
Quick Instruction of VDOT-AD2

This quick instruction of VDOT-AD2 is prepared to VDOT-PY. Please refer to "VDOT-AD2 programmer instruction manual for details.

Preparation

1. EVA-AD2 requires two 9v PP3 batteries.
   a) Before inserting the batteries, confirm the VDOT-AD2 is switched off and check polarity of battery, or damage could result.

Indicate current address

1. Turn the power switch ON.
   a) For one second, all LED's are lit and the buzzer sounds.
2. Push the detector into the base on the VDOT-AD2 while turning it clockwise until the detector locks into place.

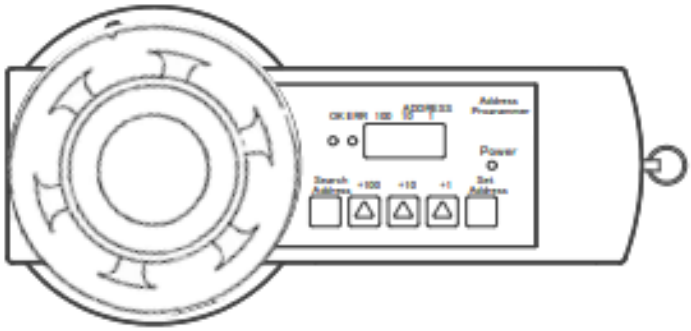

Figure A.1: Mounting a detector on VDOT-AD2

3. Press the [Search] Key
   a) Buzzer sounds, then the VDOT-AD2 starts transmitting to the detector.
   b) Do not remove the detector when transmitting, or damage could result.
4. The 7 segment LED reads [Customer code], [Type of device], [Address] in turn.
   a) The buzzer sounds, ERROR LED lights and the 7 segment LED display's an ERROR CODE when an unsupported or defective device is connected.

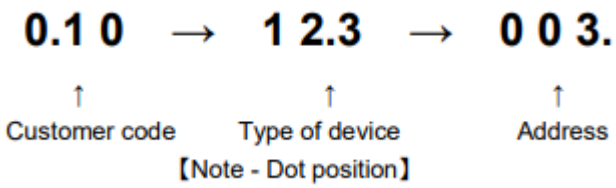

The 7 segment LED is distinguishes the Customer Code, Type and Address by the dot position in the LED. The information displayed by the 7 segment LED cycles every second and stops whilst displaying the [address] at the end of the second cycle.

Type of device is assigned to the detectors as below.

VDOT-PY: 152

Pressing any key at any time during the information collection cycle, forces the VDOT-AD2 to display the address, and await new address selection.

Set new address

1. +100, +10, +1 keys are used to select the new address.

2. Press the [Set] key
   a) The buzzer sounds, and all LED's are turned off. The VDOT-AD2 then starts transmitting to the detector.
   b) Do not remove the detector.

3. The 7 segment LED shows the new address and "complete" LED lights. If an unsupported or defective device is connected the buzzer sounds, ERROR LED is lit and the 7 segment LED reads ERROR CODE.

4. To continue changing the address for another device, change the detector and then repeat from paragraph 3.

To finish changing addresses, turn the POWER SW off