NETWORK MODULE VL-NWM

Description

The Velocity MMP system network has the facility to monitor, indicate and control the functions of a fire alarm installation, thus allowing signals to be distributed around a large site. The network will accommodate up to 64 nodes. The network uses RS485 data communication and a total network cable length of up to 10km is possible. All panels will continue to function in stand-alone mode, even if the network fails. On a Velocity MMP running in a network, all events are reported at all panels and all panels are able to remotely program other MMP panels sitting on the network. Operation of outputs over the network is determined by the programmed cause & effects. Any input on the network can be programmed to operate any output.

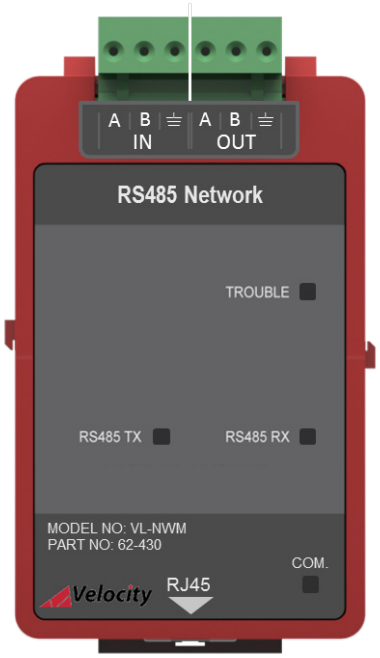

Features

- Designed to meet UL864 10th Edition requirements.
- Peer-to-peer networking.
- Comprehensive cross network cause & effects.
- Up to 64 panels may be networked together.
- Remote programming over the network.
- The network can be configured with either a ring or bus topology.
- Fault tolerant design.
- Extensive front unit status indications (See table below).
- Quick and easy to install by plugging the RJ45 cable into the module and control panel (cable supplied with unit).

Dimensions

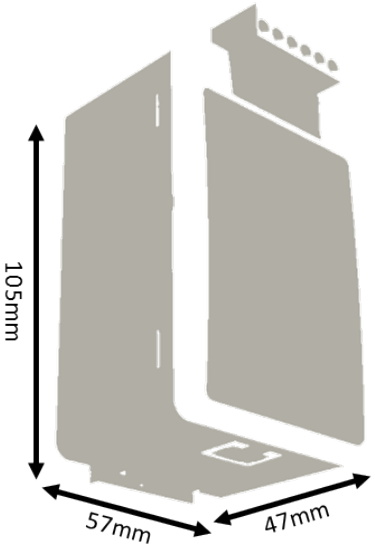

Front Unit Indications

LED Indication	Description
Trouble (Yellow)	Flashing yellow when a fault on the RS485 circuit is detected.
RS485 TX (Green)	Flashing green when the RS485 is transmitting information.
RS485 RX (Green)	Flashing green when the RS485 is receiving information.
Com. (Green)	Pulses green to show communication between the module and the motherboard.

NOT TO BE USED FOR INSTALLATION PURPOSES.
Velocity reserves the right to make changes at any time without notice in prices, colours, materials, components, equipment, specifications and models and also to discontinue models.

Specification

Specification	VL-NWM
Part Number	62-430
Design Standard	UL864 10th Edition
Approval	UL Laboratories
Communication Protocol	RS485
Maximum Network Size	64 Nodes
Maximum Distance Between Nodes	1KM (using a screened data cable) 100M (using a standard fireproof cable)
Network Wiring Typologies	Bus Ring (recommended)
Operating Temperature	0˚C (32˚F) to 49˚C (120˚F)
Max Humidity	93% Non-Condensing
Size (mm) (HxWxD)	105mm x 57mm x 47mm
Weight	0.15KG
Recommended Cable	Belden Screened Data Cable

Interior Panel View

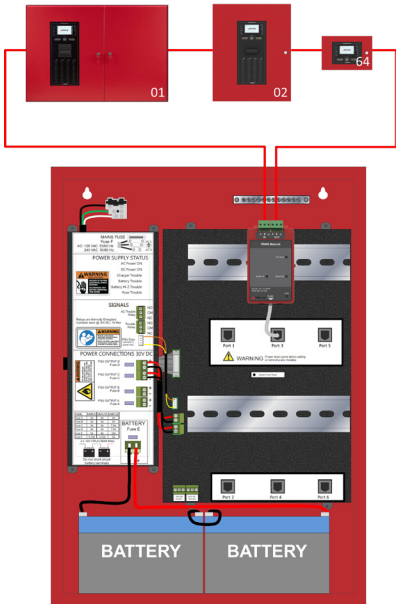

Typical Wiring Diagram

(For more information on wiring, please refer to the VL-NWM installation guide).

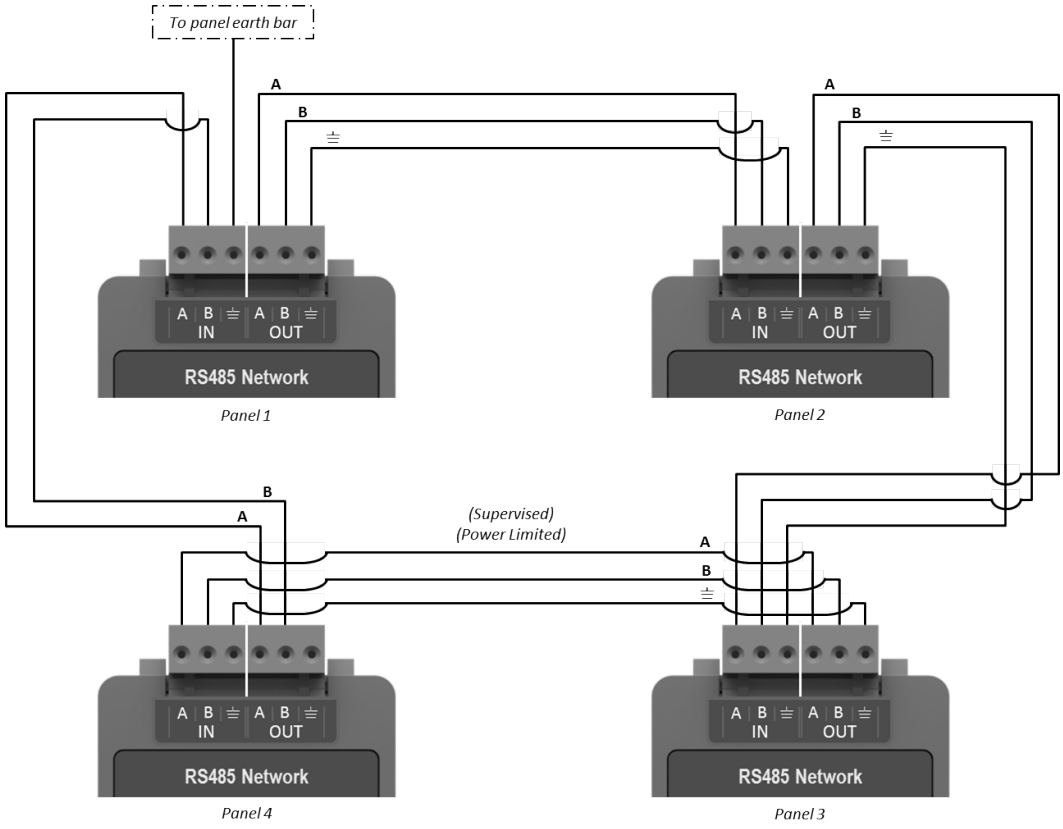

All specifications are subject to change without any notice.
For more information, contact with VELOCITY.

Velocity DETECTION OVER TIME
Zeta Alarms Limited
72-78 Morfa Road, Swansea
SA1 2EN
Tel: +44 1792 455 175 FAX: +44 1792 455 176

Distributed By