NOTIFICATION APPLIANCE CIRCUIT MODULE - CLASS A VL-NCA

Description

The plug-in VL-NCA module provides power for, and handles communications to the non-addressable notification appliances. It has one notification appliance circuit that can be wired in the class A configuration. Up to a maximum of 1A can be connected to a single class A circuit. The circuit is supervised for open, short and earth trouble conditions and will report this status back to a Velocity MMP fire alarm control panel. An additional feature that is included in the VL-NCA module is that it has the ability to be programmed as a 24v auxiliary special application class A output, which can be used to provide power to external equipment.

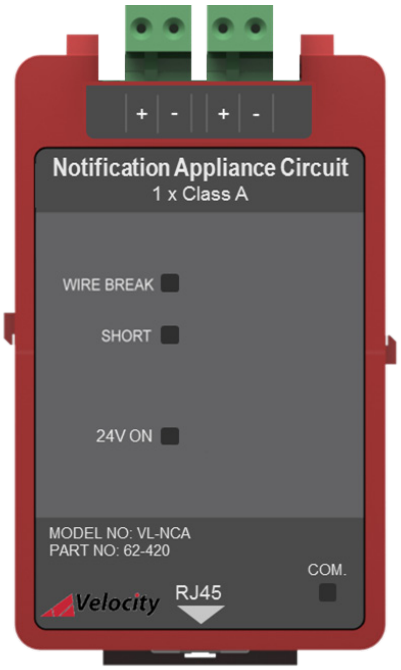

Features

- Designed to meet UL864 10th Edition requirements.
- Bulit-in synchronization circuitry (only compatible with Velocity devices).
- Can be programmed for either unsynchronized bells or synchornized horns/chimes & beacons.
- 1 x Class a NAC output circuit (1A maximum load).
- Extensive front unit status indications (see table below).
- Can be programmed as a 24v auxiliary output (1A maximum load).
- Quick and easy to install by plugging the RJ45 cable into the module and control panel (cable supplied with unit).
- Power Limited.

Dimensions

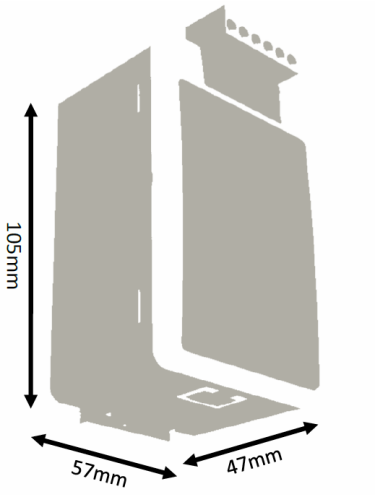

Front Unit Indications

LED Indication	Description
Wire Break (Yellow)	Flashing yellow when a wire break in the circuit is detected.
Short (Yellow)	Flashing yellow when a short in the circuit is detected.
24v On (Green)	Flashing green when the module is programmed as an unsynchronised bell output. Solid green when the module is programmed to provide a 24v auxiliary output.
Com. (Green)	Pulses green to show communication between the module and the motherboard.

NOT TO BE USED FOR INSTALLATION PURPOSES.
Velocity reserves the right to make changes at any time without notice in prices, colours, materials, components, equipment, specifications and models and also to discontinue models.

Specification

Specification	VL-NCA
Part Number	62-420
Design Standard	UL864 10th Edition
Approval	UL Laboratories
Circuit Type	Regulated 24V DC. Power Limited & Supervised.
Maximum NAC Current	1A
Maximum RMS current for a single notification appliance	700mA
Maximum Line Impedance	1.8Ω total (0.9Ω per core)
Wiring Class	1 x Class A [Power limited & Supervised]
Special Applications	Auxiliary 24 VDC Output [Power limited & Unsupervised]
Synchronisation	Selectable at each module as :- Sounder (Uses synchronisation protocol for horn strobes) or Bell (Will pulse the output voltage to give the required temporal pattern)
Operating Temperature	0˚C (32˚F) to 49˚C (120˚F)
Max Humidity	93% Non-Condensing
Size (mm) (HxWxD)	105mm x 57mm x 47mm
Weight	0.15KG
Terminal Wiring Size	18 AWG to 14 AWG (0.8mm² to 2.5mm²)

Interior Panel View

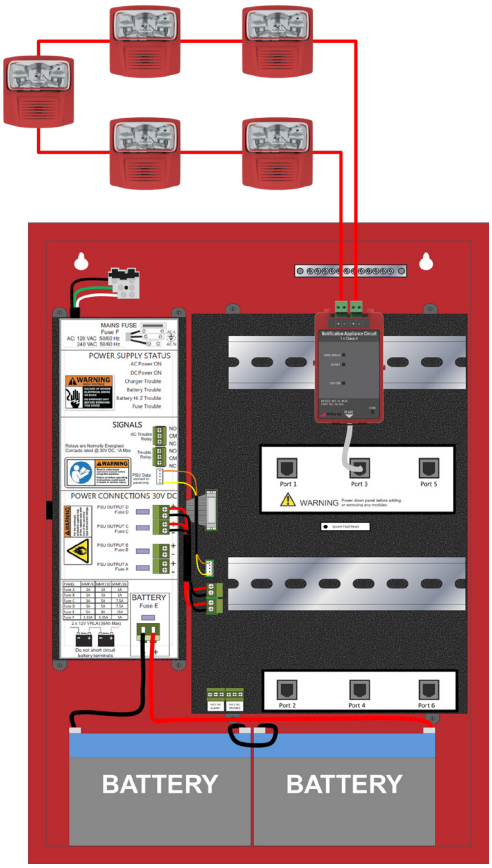

Compatible Devices/Accessories

Model No.	Description
VL-MH-W	Mini Horn Notification Appliance (White)
VL-MH-R	Mini Horn Notification Appliance (Red)
VL-W-C-W	Chime Notification Appliance (Wall Mount) (White)
VL-W-C-R	Chime Notification Appliance (Wall Mount) (Red)
VL-W-M-W	Multi-Tone Chime Notification Appliance (Wall Mount) (White)
VL-W-M-R	Multi-Tone Chime Notification Appliance (Wall Mount) (Red)
VL-W-CS-W	Chime & Multi-Candela Notification Appliance (Wall Mount) (White)
VL-W-CS-R	Chime & Multi-Candela Notification Appliance (Wall Mount) (Red)
VL-C-CS-W	Chime & Multi-Candela Notification Appliance (Ceiling Mount) (White)
VL-C-CS-R	Chime & Multi-Candela Notification Appliance (Ceiling Mount) (Red)
VL-W-MS-W	Multi-Tone & Multi-Candela Notification Appliance (Wall Mount) (White)
VL-W-MS-R	Multi-Tone & Multi-Candela Notification Appliance (Wall Mount) (Red)
VL-C-MS-W	Multi-Tone & Multi-Candela Notification Appliance (Ceiling Mount) (White)
VL-C-MS-R	Multi-Tone & Multi-Candela Notification Appliance (Ceiling Mount) (Red)
VL-W-S-W	Multi-Candela Notification Appliance (Wall Mount) (White)
VL-W-S-R	Multi-Candela Notification Appliance (Wall Mount) (Red)
VL-C-S-W	Multi-Candela Notification Appliance (Ceiling Mount) (White)
VL-C-S-R	Multi-Candela Notification Appliance (Ceiling Mount) (Red)

▪ Typical Wiring Diagram (Class A) - Synchronized Velocity NAC Devices

(For more information on wiring, please refer to the VL-NCA installation guide (Doc:_____)

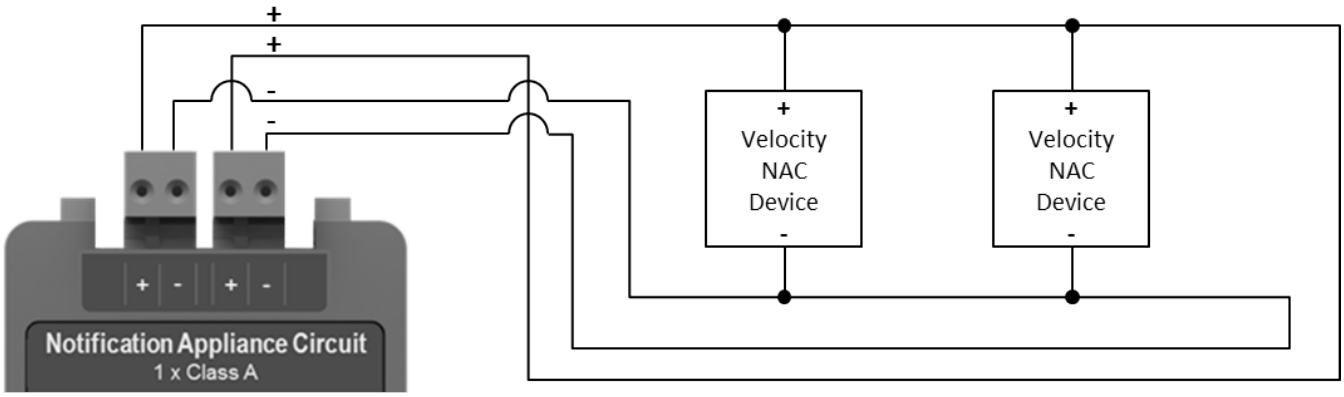

(VL-NCA)
(Configured for synchronized Velocity NAC devices)

(Supervised)
(Synchronized)
(Power Limited)

▪ Typical Wiring Diagram (Class A) - Unsynchronized Velocity Bell Devices

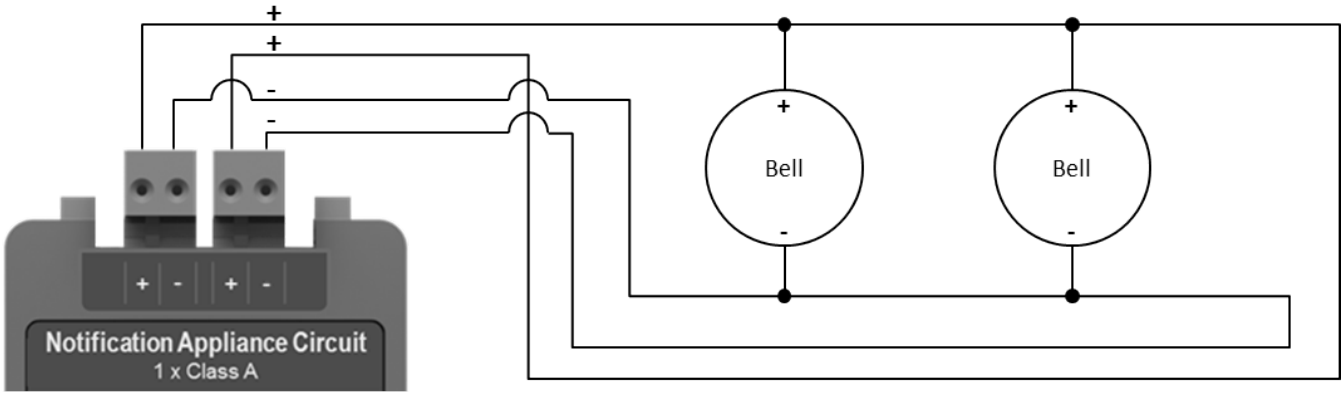

(VL-NCA)
(Configured for unsynchronized bell devices)

(Supervised)
(Unsynchronized)
(Power Limited)

▪ Typical Wiring Diagram (Auxiliary 24VDC)

(For more information on wiring, please refer to the VL-NCA installation guide (Doc:_____)

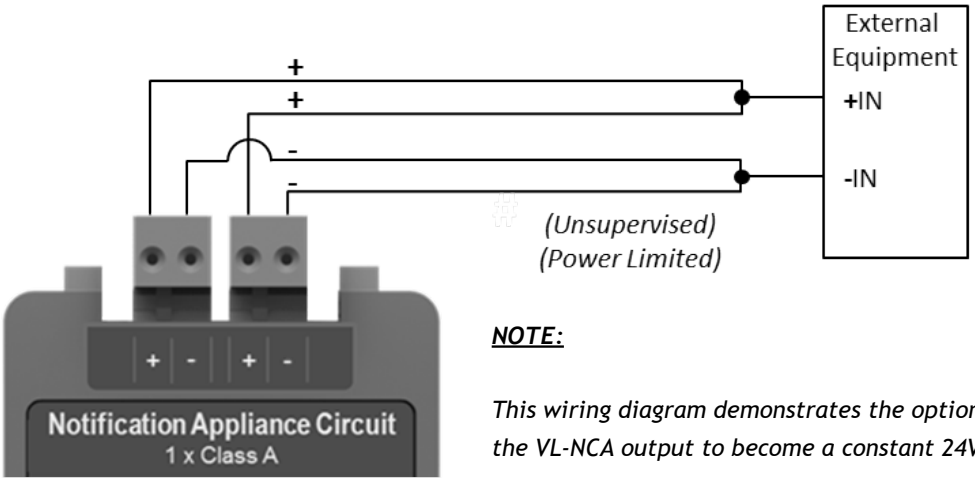

(VL-NCA)
(Configured as a 24v Auxiliary Output)

NOTE:

This wiring diagram demonstrates the option to program the VL-NCA output to become a constant 24VDC output

All specifications are subject to change without any notice.
For more information, contact with VELOCITY.

Zeta Alarms Limited
72-78 Morfa Road, Swansea
SA1 2EN
Tel: +44 1792 455 175 FAX: +44 1792 455 176

Distributed By