MULTI RELAY MODULE - FORM C VL-MRM

Description

The VL-MRM is a relay module that is designed to be DIN mounted inside of a Velocity control panel. It's powered and is interfaced to the Velocity MMP via a RJ45 connection. The module has three form C relays which can be typically used to control lift operation during an alarm, start fire pumps or stop ventilation fans etc. Each relay output can be configured as a common alarm, common trouble, common supervisory or a programmable output via the Velocity MMP settings.

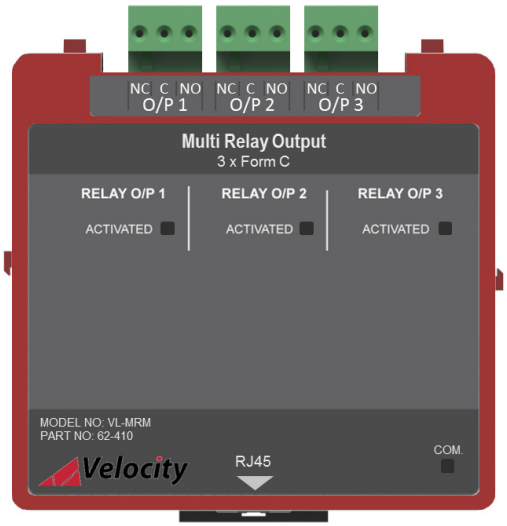

Features

- Designed to meet UL864 10th Edition requirements.
- 3 x Form C relay outputs.
- Each relay can be programmed to activate on alarm, supervisory, or trouble.
- Extensive front unit status indications (See table below).
- Quick and easy to install by plugging the RJ45 cable into the module and control panel (cable supplied with unit).

Dimensions

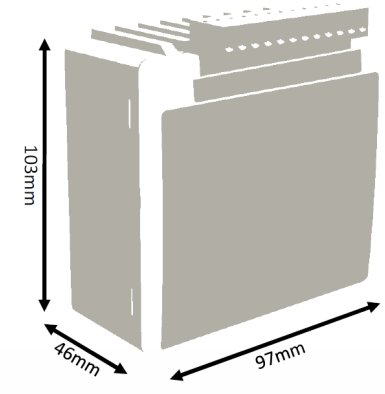

Front Unit Indications

LED Indication	Description
Activated (Red)	On steady when the relay is active for each relay.
Com. (Green)	Pulses to show communication between the module and the motherboard.

NOT TO BE USED FOR INSTALLATION PURPOSES.
Velocity reserves the right to make changes at any time without notice in prices, colours, materials, components, equipment, specifications and models and also to discontinue models.

Specification

Specification	VL-MRM
Part Number	62-410
Design Standard	UL864 10th Edition
Approval	UL Laboratories
Relay Type	Form C x 3
Switching Capacity	5 A, 30 VDC (resistive) 5 A, 250 VAC (general use)
Operating Temperature	0˚C (32˚F) to 49˚C (120˚F)
Max Humidity	93% Non-Condensing
Size (mm) (HxWxD)	103mm x 97mm x 46mm
Weight	0.2KG
Terminal Wiring Size	18 AWG to 14 AWG (0.8mm² to 2.5mm²)
Relay Modes	Common alarm, common trouble, Common supervisory or Programmable

Interior Panel View

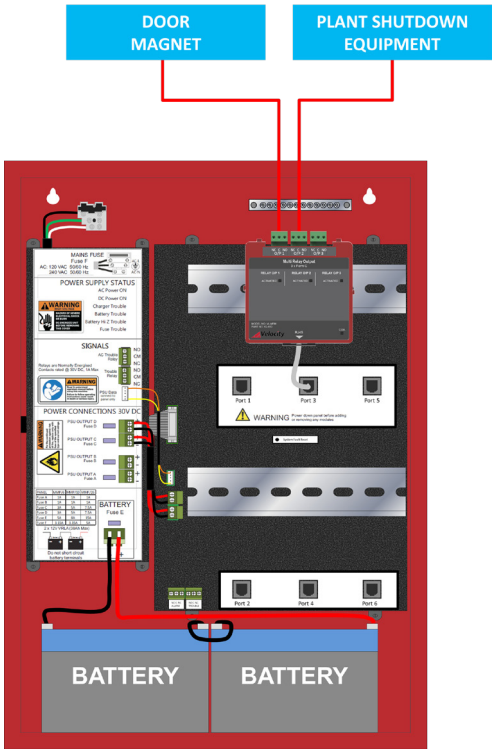

Typical Wiring Diagram

(For more information on wiring, please refer to the VL-MRM installation guide (Doc:_____)

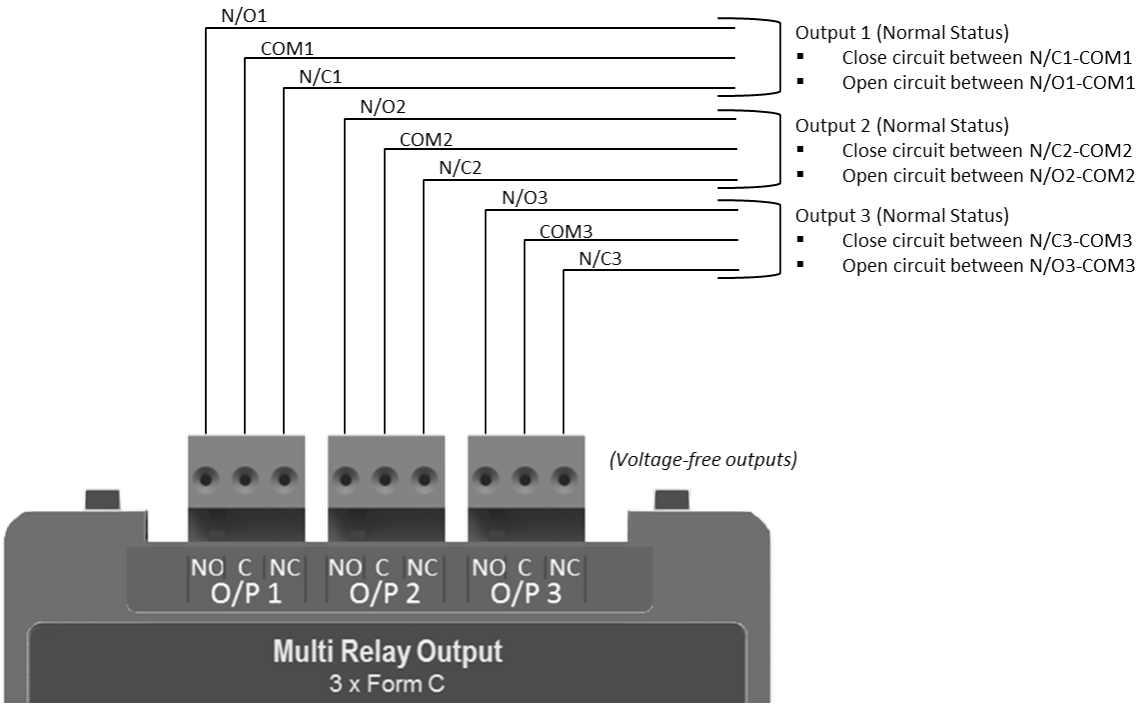

All specifications are subject to change without any notice.
For more information, contact with VELOCITY.

Velocity® DETECTION OVER TIME
Zeta Alarms Limited
72-78 Morfa Road, Swansea
SA1 2EN
Tel: +44 1792 455 175 FAX: +44 1792 455 176

Distributed By