MULTI INPUT MODULE - CLASS B VL-MIM

Description

The VL-MIM is a six input module that is designed to be DIN mounted inside of a Velocity control panel. It's powered and interfaced to the Velocity MMP via a RJ45 connection. The module has six class B inputs that are commonly used to monitor and raise alarms from any ancillary equipment such as sprinkler flow switches, aspiration detectors, secondary fire control panels, beam detectors, and external power supplies etc. The module monitors and transmits the status (normal, open, short, or alarm) of inputs to a control panel. Each input can be programmed to either give a supervisory or alarm signal when active.

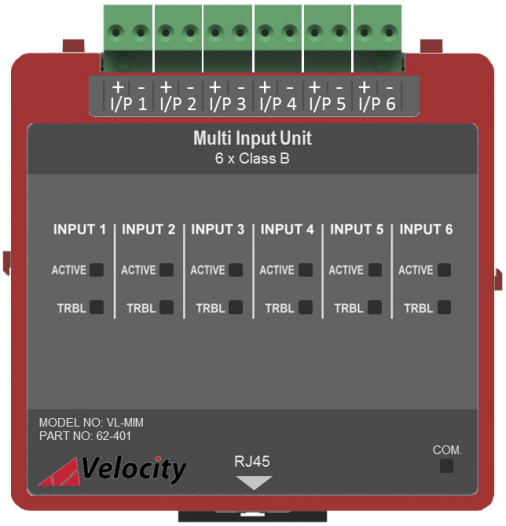

Features

- Designed to meet UL864 10th Edition requirements.
- 6 x Class B input circuits.
- Each input is monitored for open & short circuits.
- Extensive front unit status indications (see table below).
- Quick and easy to install by plugging the RJ45 cable into the module and control panel (cable supplied with unit).
- Each input can be configured as either Alarm or Supervisory.

Dimensions

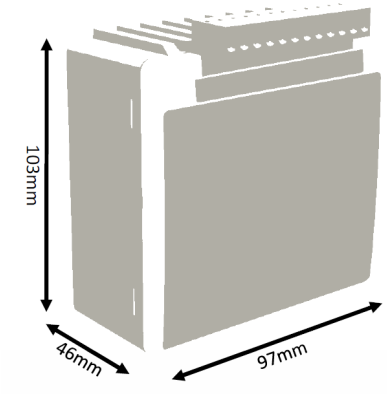

Front Unit Indications

LED Indication	Description
Active (Red)	On steady when the input is in an alarm/supervisory condition.
Trouble (Yellow)*	Flashing when the input is in a trouble condition.
Com. (Green)	Pulses to show communication between the module and the motherboard.

**When a VL-MIM circuit is disabled, the Trouble LED will be on steady (yellow).*

NOT TO BE USED FOR INSTALLATION PURPOSES.
Velocity reserves the right to make changes at any time without notice in prices, colours, materials, components, equipment, specifications and models and also to discontinue models.

Specification

Specification	VL-MIM
Part Number	62-401
Design Standard	UL864 10th Edition
Approval	UL Laboratories
Wiring Class	6 x Class B [Power limited & Supervised]
Circuit Voltage	24VDC Nominal (16V - 24.5V with EOL fitted)
Input Max Line Impedance	10Ω
End of Line Resistor	4K7Ω
Triggering Resistor	1KΩ
Operating Temperature	0˚C (32˚F) to 49˚C (120˚F)
Max Humidity	95% Non-Condensing
Size (mm) (HxWxD)	103mm x 97mm x 46mm
Weight	0.2KG
Recommended Cable Sizes	22 AWG to 18 AWG (0.3mm² to 0.8mm²)

Interior Panel View

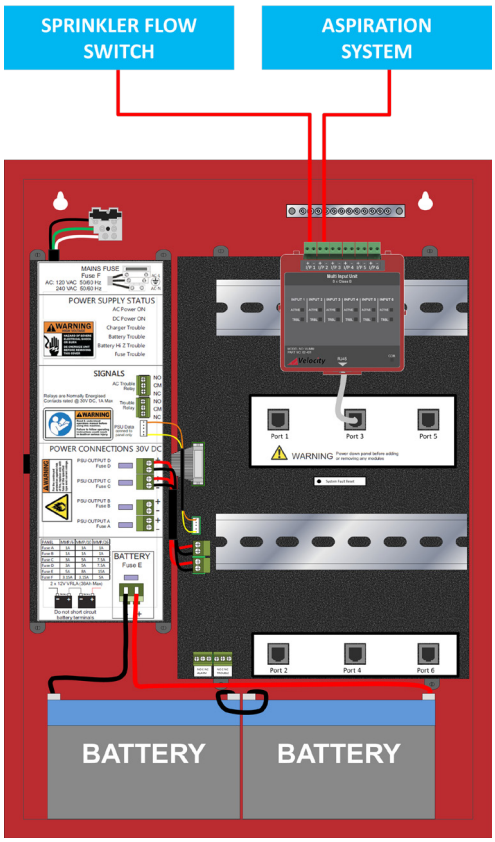

Typical Wiring Diagram

(For more information on wiring, please refer to the VL-MIM installation guide (Doc:_____)

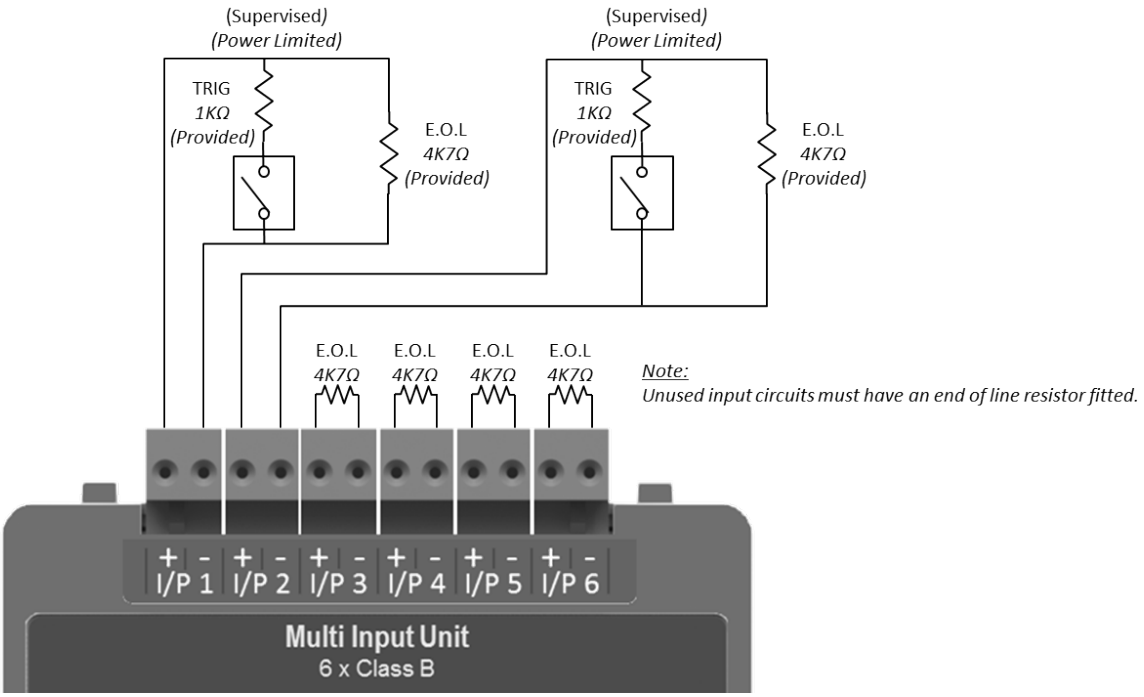

All specifications are subject to change without any notice.
For more information, contact with VELOCITY.

Velocity® DETECTION OVER TIME

Zeta Alarms Limited
72-78 Morfa Road, Swansea
SA1 2EN
Tel: +44 1792 455 175 FAX: +44 1792 455 176

Distributed By