NON ADDRESSABLE MINI HORN NOTIFICATION APPLIANCE VL-MH



Features:

- Designed to meet UL requirements.
- Compatible with all Velocity NAC.
- Small & Compact design.
- Adjustable sound volume output levels.
- Designed to be wall mounted.
- Indoor use only.
- Powered by 2-wire DC 24V.
- Can be installed in a standard single gang box.
- Horns on the same NAC can be synchronized.

Description

The VL-MH is an indoor only, 2-wired DC 24V non-addressable alarm notification appliance. It has the ability to adjust the sound volume output levels, and is intended to be mounted or installed onto a wall. It has been designed to be connected to a Velocity control panel NAC, where the sound between horns in the same circuit area can be synchronized. Caution: When an alarm signal is emitted, it means there may be an emergency, and should be payed attention to immediately.

Mounting

Products can be installed in standard single gang back box. Before installing and wiring, the power of the NAC must be powered off. After the completion of the terminal wiring, ensure that the terminals are locked.

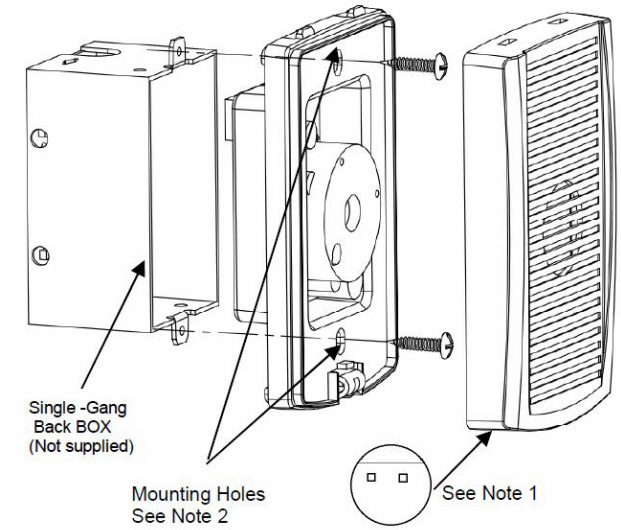

Dimensions

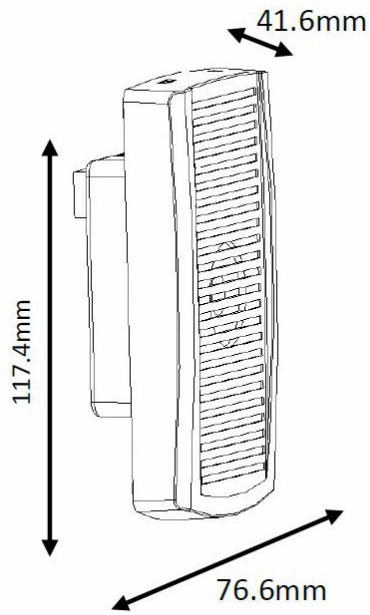

Note:
Note 1: To remove the cover, depress the snap at the top of the Minihorn with a key(or flat tip screwdriver) while pulling the cover up with the other hand.

Note 2: The Minihorn attaches directly to a standard single-gang box (not supplied) flush mounted or surface mounted. Attach the mini horn to the electrical box using the two screws supplied.

NOT TO BE USED FOR INSTALLATION PURPOSES.
Velocity reserves the right to make changes at any time without notice in prices, colours, materials, components, equipment, specifications and models and also to discontinue models.

Specifications

Specification	VL-MH
Colour	White or Red Available
Design Standard	UL 464
Approval	UL Laboratories
Nominal Voltage	Regulated 24V DC
Operating Voltage Range	Regulated 16 VDC to 33 VDC
Operating Temperature	32° to 120° F (0° to 49°C)
Humidity Range	10% to 93%, non-condensing at 100°F
Dimensions (HxWxD)	117.4mm × 76.6mm × 41.6mm
Terminal Wiring Size	18 AWG to 12 AWG
Mounting Position	Wall
Material	PA-763
IP Rating	23
Mouting Box	Single Gang Box

Product Codes

Mini Horn (White)	VL-MH-W
Mini Horn (Red)	VL-MH-R

Sound Level

Output Sound Level	Maximum Operating Current RMS
High	55mA
Standard	55mA

Wiring

In order to ensure that the total current consumption of the circuit does not exceed the maximum load current of the NAC module, the device quantity must be considered in the design of system.

If a NAC has the maximum number of notification appliance connected, any loss of voltage must be calculated to ensure notification products work within their rated voltage range. Please refer to the FACP or NAC and other equipment installation instructions.

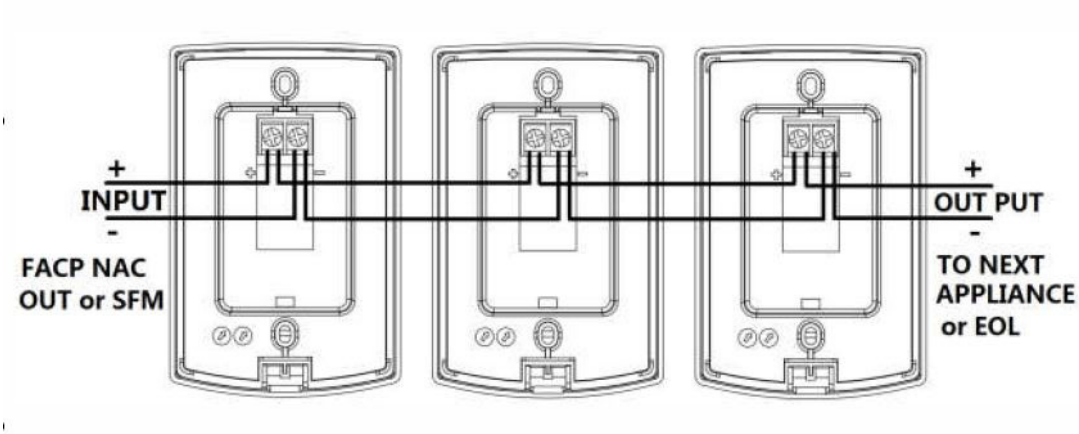

All specifications are subject to change without any notice.
For more information, contact with VELOCITY.

Velocity® DETECTION OVER TIME

Zeta Alarms Limited
72-78 Morfa Road, Swansea
SA1 2EN
Tel: +44 1792 455 175 FAX: +44 1792 455 176

Distributed By