VDOT-D2xC1X05

EXPLOSION PROOF ALARM HORN SOUNDER

Description

The VDOT-D2xC1X05 features a high output, 116dB(A) alarm horn sounder combined with a 5 Joule Xenon storbe warning light / beacon. Globally approved, the robust Type 4/4X, IP66 enclosure ensures suitability for all haz loc fire alarm and general signalling applications.

The corrosion proof, marine grade aluminium die cast enclosure is chromated and powder coated providing resilience in the harshest of hazardous location environments.



Features

- 5 Joule Xenon beacon with 116dB(A) alarm horn
- UL464/UL1638 Fire Alarm
- Effective Intensity: 94.78 cd
- Peak Candela: 33,410 cd
- 64 alarm tones, 4 remotely selectable alarm stages/ channels
- Automatic synchronisation on multi-sounder system
- Field replacable lens colour filters

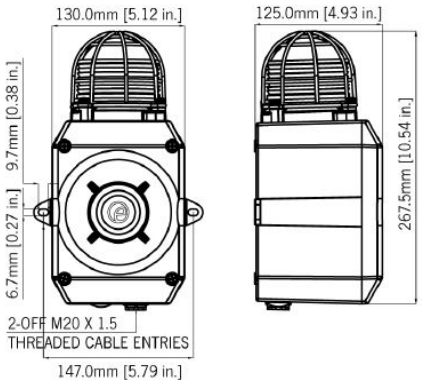

Features

- UL File ref: E230764
- IECEx cert: UECEx ULD 14.0004X
- ATEX cert: DEMKO 14 ATEX 4786493904X
- CSFM listing: 7136-2279:0503

NOT TO BE USED FOR INSTALLATION PURPOSES.
Velocity reserves the right to make changes at any time without notice in prices, colours, materials, components, equipment, specifications and models and also to discontinue models.

③ Specifications

Alarm Horn Sounder:	
Maximum Output	116dB(A) @ 1 metre [107 dB(A) @ 10ft/3m]
Nominal Output	112 dB(A) @ 1m +/- 3dB - tone 2 [103dB(A) @ 10ft/3m]
No. of Tones	64 (UKOOA / PFEER compliant)
No. of Stages	4
Volume Control	Adjustable -12dB(A) [Tone 2]
Effective Range	125n/140ft @ 1KHz
Stage Switching	DC units - Positive or Negative line AC Units - Common supply line
Xenon Stage Beacon:	
Energy	5 Joules (5Ws)
Flash Rate	1Hz (60 fpm)
Peak Candela	500,000 cd - calculated from energy (J)
Effective Intensity cd	250 cd - calculated from energy (J)
Peak Candela	33,410 cd - measured ref. to I.E.S.
Effective Intensity	94.78 cs - measured ref. to I.E.S.
Lens Colours	Amber, Blue, Clear, Green, Magenta, Red & Yellow
Tube Life	Emissions are reduced to 70% after 8 millions flashes
General:	
Voltages DC	24V dc [20-28Vdc[; 48V dc [35-58Vdc]
Voltages AC	115V ac 50/60Hz; 230V ac 50/60Hz
Ingress Protection	EN60529: IP66 UL50E / NEMA250: 4 / 4X / 3R / 13
Housing Material	Marine grade aluminium Al Si 12 Cu
Colour	Red (RAL3000), grey (RAL7038)
Cable Entries	2 x M20 x 1.5mm threaded gland entries
Terminals	0.5 - 2.5mm^2 (20-14 AWG)
Grouding Stud	M5
Operating Temp	-40 to +70°C [-40° to +158°F] - Class I Div 2 -40 to +50°C [-40° to +122°F] - All other approvals
Relative Humidity	95%
Weight	DC: 2.80kg / 6.16lbs AC: 3.10kg / 6.82lbs

③ Part Codes

Version:	Part Code:	Description:
Product Type	D2C1X05	Haz Loc alarm horn sounder & xe-non strobe warning light / beacon
Voltage	DC024 DC048 AC115 AC230	24V dc - Ul / cUL Fire Alarm 48V dc 115V ac 230V ac
Cable Entry Type [e]	A B C D E F G	2 x M20x1.5mm 2 x 1/2" NPT - adaptors 2 x 3/4" NPT - adaptors 2 x M25x1.5mm - adaptors 1 x 1/2" NPT - adaptor 1 x 3/4" NPT - adaptor 1 x M25x1.5mm - adaptor
Adaptor/Stop-ping plug mate-rial [m]	B N S	Brass Nickel Plates Stainless Steel
Lens guard matl. & tag [s]	1 2 3 4	A2 304 Stainless Steel A4 316 Stainless Steel A2 304 St/St with Equip. Tag A4 316 St/St with Equip. Tag
Product Version [x]	A1	UL, cUL, IECEx & ATEX
Enclosure Colour	R G	Red RAL3000 Grey RAL7038
Lens Colour	A B C G M R Y	Amber Blue Clear Green Magenta Red Yellow
Accessories	SP65-0001-A2 SP65-0001-A4 SP65-0002-A2 SP65-0002-A4	Pole Mount bracket Kit 2" St/St A2 (304) Pole Mount Bracket kit 2" St/St A4 (316) Sunshade - St/St A2 (304) Sunshade - St/St A4 (316)
Alarm Sounder Version:		
Version:	**Voltage:**	**Current:**
24V dc	10-30V dc	313mA [at nominal voltage]
48V dc	38-58V dc	181mA [at nominal voltage]
115V ac 50/60Hz	+/-10%	90mA
230V ac 50/60Hz	+/-10%	52mA

All specifications are subject to change without any notice.
For more information, contact with VELOCITY.

Velocity
DETECTION OVER TIME
Zeta Alarms Limited
72-78 Morfa Road, Swansea
SA1 2EN
Tel: +44 1792 455 175 FAX: +44 1792 455 176

Distributed By