VDOT-U5015

EXPLOSION PROOF SMOKE DETECTOR



Features

- FM Approved for use in Class I, Division 1, and Zone hazardous locations
- FM Approved for smoke detection performance
- IECEx Zone approved
- Trouble-free photoelectric operation
- 0-20 mA output for DCS integration
- Self-checking circuitry ensures reliable smoke detection
- Alarm, Auxiliary, and Fault relays for controlling annunciating devices or fire panel interface
- LED provides a visual indication that an alarm has occurred
- IP44 ingress protection level suitable for onshore or offshore
- requirements

Description

The Det-Tronics® SmokeWatchTM U5015 Explosion Proof Smoke Detector has Division and Zone explosion-proof ratings and is suitable for industrial and commercial applications. The SmokeWatch smoke detector is designed to operate effectively with smoldering and rapidly growing fires and contains the ability to annunciate fault ensuring no undis-closed failures. The U5015 Smoke Detector outputs include 0-20 mA, a localized LED, and relays.

Typical application that use the VDOT-U5015 include:

- Combustible storage facilities
- Munitions manufacturing
- Volatile chemical storage
- Chemical processing plants
- Petroleum refineries
- Turbine enclosures
- Battery rooms
- HVAC applications

The hot-swappable sensor module is intrinsically safe and allows live maintenance while under power, without de-classifying the hazardous area. The integrated junction box is available in a variety of port configurations for simplified wiring and installation. See Figure 1 for all the U5015 Smoke Detector components.

Benefits

- Ideally suited for classified areas in the petrochemical, oil,and gas industry
- DCS, PLC, integration with milliamp, or relay outputs
- Rugged design for environmental extremes
- Visual confirmation of detector alarm
- Detects smoldering fires
- No undisclosed failures
- Able to mount on exterior of duct (with Q5016)

NOT TO BE USED FOR INSTALLATION PURPOSES.
Velocity reserves the right to make changes at any time without notice in prices, colours, materials, components, equipment, specifi-cations and models and also to discontinue models.

Specifications

Specifications	VDOT-U5015	
Operating Voltage	12-30 Vdc (24 Vdc nominal)	
Power Consumption	3.5 watts maximum (2.75 watts at 24 Vdc)	
Output Relays	Smoke alarm relay, Form C, 5 amperes at 30 Vdc: The smoke alarm relay has normally open/normally closed contacts and normally de-energized operation	
	Fault relay, Form A, 5 amperes at 30 Vdc: The fault relay has normally open contacts and normally energized operation.	
	Auxiliary relay, Form C, 5 amperes at 30 Vdc: The auxiliary relay has normally open/normally closed contacts and normally de-energized operation.	
Temperature Range	Operating:	-20˚C to +65˚C (-4˚F to +149˚F)
	Storage:	-55˚C to +70˚C (-67˚F to +158˚F)
Humidity Range	5 to 95% relative humidity	
Ingress Range	IP44 (Applicable to ceiling mount only)	
Current Output	0-20 mA (±0.3 mA) dc current, with maximum loop resistance of 300 ohms from 12-17.9 Vdc, 500 ohms from 18 to 19.9 Vdc, and 600 ohms from 20-30 Vdc	
Terminals	UL/CSA rated for 14-18 AWG or 2.5-0.75 mm2 wire	
Smoke Density	1.5% - 2.5% obscuration per foot. (4.9% - 8.2% obscuration per meter)	
Thread Options	3/4 inch NPT or M25 Multi-port models available	
Enclosure Material	Polycarbonate / ABS - Smoke Detector Copper-free aluminum (painted) - Junction Box	
Shipping Weight (Approximate)	7.85 lbs (3.56 kg)	
Warranty Period	1 Year	
Dimensions	See Figure 2 Below	
Certification	FM APPROVED	Class 1 Div 1 Groups B, C, D (T4) Class 1 Div 2 Groups A, B, C, D (T4) Class 1 Zone 1 AEX db ia IIC (T4 Gb) Tamb -20˚C to +65˚C IP44
	IEC IECEx	IECEx FMG15.0014X Ex db ia IIC T4 Gb Tamb -20˚C to +65˚C IP44
	CSA	Class - C481804 - Signal Appliances - Systems - For Hazardous Locations Ex db ia IIC T4 IP44 Tamb -20˚C to +65˚C

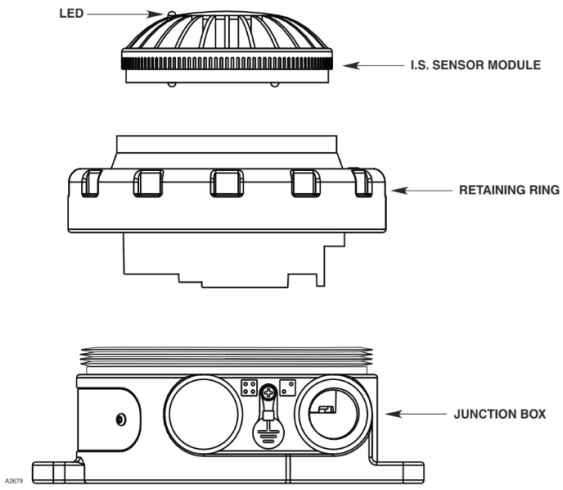

Figure 1—U5015 Components

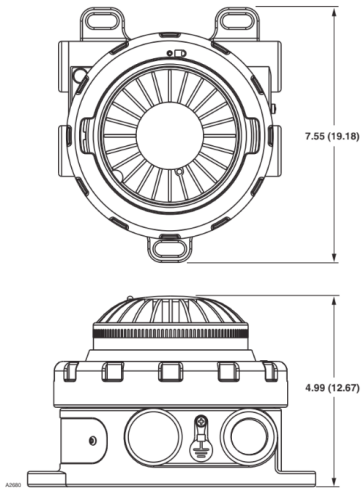

Figure 2—U5015 Dimensions in Inches (cm)

NOT TO BE USED FOR INSTALLATION PURPOSES.
Velocity reserves the right to make changes at any time without notice in prices, colours, materials, components, equipment, specifications and models and also to discontinue models.